REV	DESCRIPTION	DFTR	CHKR	ENGR APPV	DATE

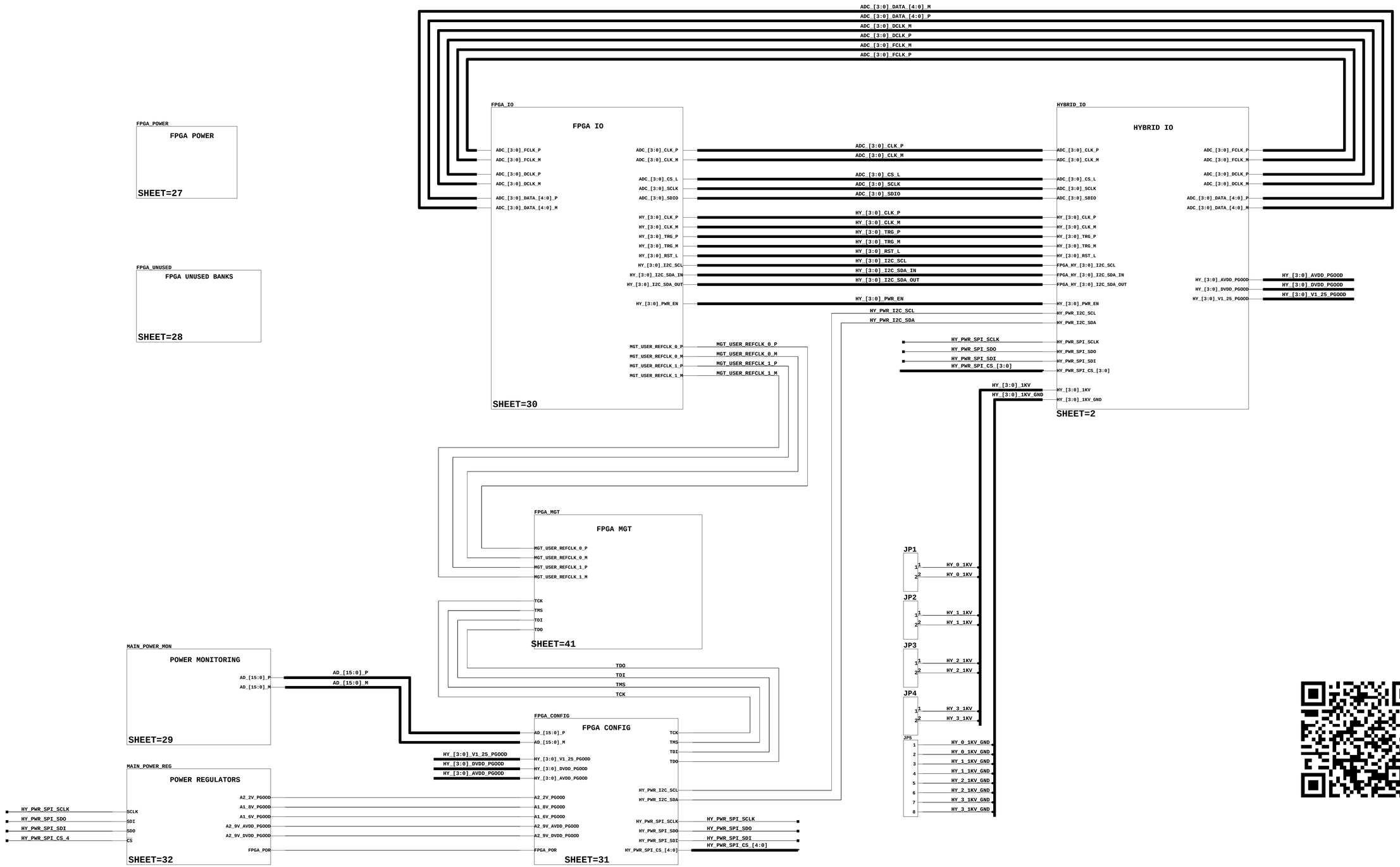

11/10/2013:10:04

SLAC NATIONAL ACCELERATOR LABORATORY
U.S. DEPARTMENT OF ENERGY
STANFORD UNIVERSITY — STANFORD, CALIFORNIA

PROPRIETARY DATA OF STANFORD UNIVERSITY AND/OR U.S. DEPARTMENT OF ENERGY. RECIPIENT SHALL NOT PUBLISH THE INFORMATION WITHIN UNLESS GRANTED SPECIFIC PERMISSION OF STANFORD UNIVERSITY.

		DATE	APPROVALS
ENGR	Benjamin Reese	2013	
DFTR			
CHKR			

SHEET 1 OF 41

HPS Front End Board
TOP LEVEL BLOCK

LOCATED AT SHEET TOP

SD-249-901-07-C00 D

REV	DESCRIPTION	DFTR	CHKR	ENGR APPV	DATE

NOTE: VCCO_B_= VCCO_14 = VCCO_15 for BPI boot

NOTE: Master BPI Boot M[2:0] = 010

NOTE: XADC Configured to use on-chip reference

NOTE: PUDC = GND, enable pullup,global weak pullup=ENABLED

NOTE: VCCO_B_= VCCO_14 = VCCO_15 for BPI boot

NOTE: VCCO_B_= VCCO_14 = VCCO_15 for BPI boot

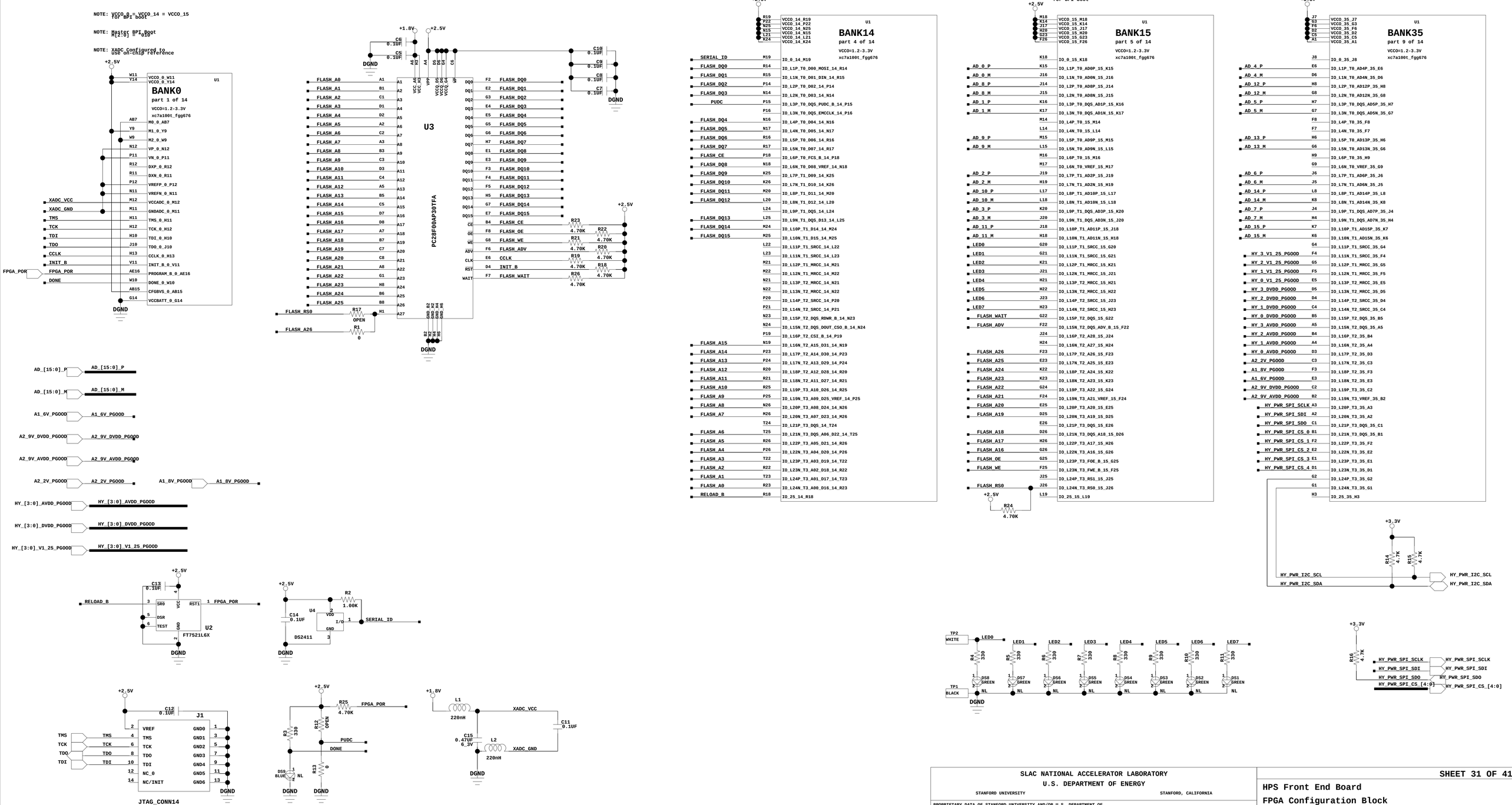

11/10/2013:09:59

SLAC NATIONAL ACCELERATOR LABORATORY
U.S. DEPARTMENT OF ENERGY
STANFORD UNIVERSITY — STANFORD, CALIFORNIA

PROPRIETARY DATA OF STANFORD UNIVERSITY AND/OR U.S. DEPARTMENT OF ENERGY. RECIPIENT SHALL NOT PUBLISH THE INFORMATION WITHIN UNLESS GRANTED SPECIFIC PERMISSION OF STANFORD UNIVERSITY.

		DATE	APPROVALS
ENGR	Benjamin Reese	2013	
DFTR			
CHKR			

SHEET 31 OF 41

HPS Front End Board
FPGA Configuration Block

LOCATED AT SHEET 1

SD-249-901-07-C00 — D

REV	DESCRIPTION	DFTR	CHKR	ENGR APPV	DATE

29/09/2013:13:52

SLAC NATIONAL ACCELERATOR LABORATORY
U.S. DEPARTMENT OF ENERGY
STANFORD UNIVERSITY STANFORD, CALIFORNIA

PROPRIETARY DATA OF STANFORD UNIVERSITY AND/OR U.S. DEPARTMENT OF ENERGY. RECIPIENT SHALL NOT PUBLISH THE INFORMATION WITHIN UNLESS GRANTED SPECIFIC PERMISSION OF STANFORD UNIVERSITY.

		DATE	APPROVALS
ENGR	Benjamin Reese	2013	
DFTR			
CHKR			

HPS Front End Board
FPGA IO Block

LOCATED AT SHEET 1

SD-249-901-07-C00 D

REV	DESCRIPTION	DFTR	CHKR	ENGR APPV	DATE

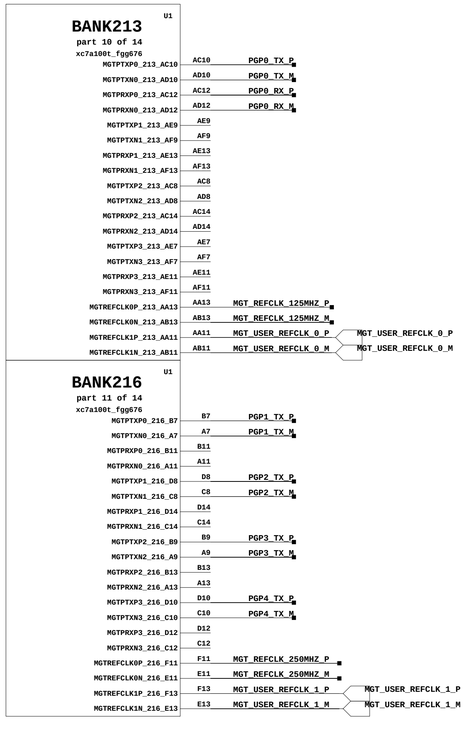

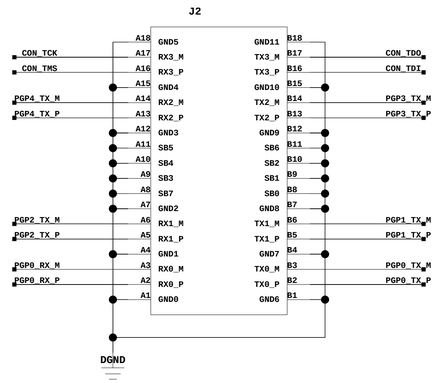

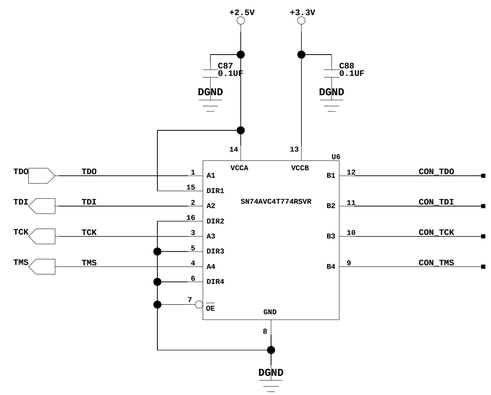

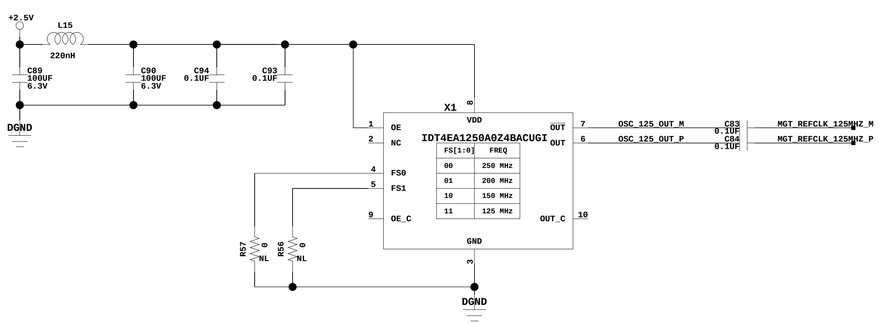

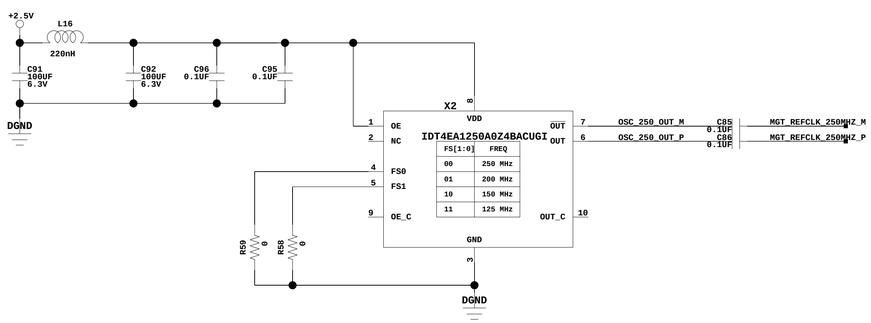

11/10/2013:09:59

SLAC NATIONAL ACCELERATOR LABORATORY
U.S. DEPARTMENT OF ENERGY
STANFORD UNIVERSITY STANFORD, CALIFORNIA

PROPRIETARY DATA OF STANFORD UNIVERSITY AND/OR U.S. DEPARTMENT OF ENERGY. RECIPIENT SHALL NOT PUBLISH THE INFORMATION WITHIN UNLESS GRANTED SPECIFIC PERMISSION OF STANFORD UNIVERSITY.

		DATE	APPROVALS
ENGR	Benjamin Reese	2013	
DFTR			
CHKR			

HPS Front End Board
FPGA MGT Block

LOCATED AT SHEET 1

SD-249-901-07-C00 D

REV	DESCRIPTION	DFTR	CHKR	ENGR APPV	DATE

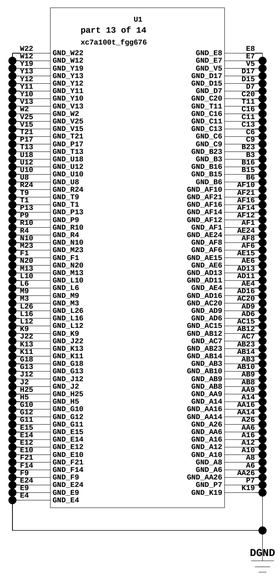

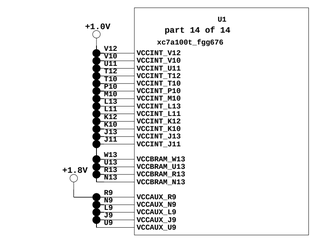

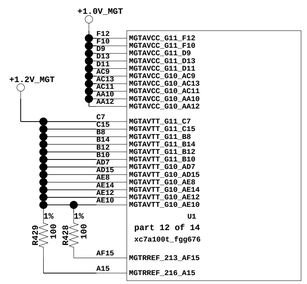

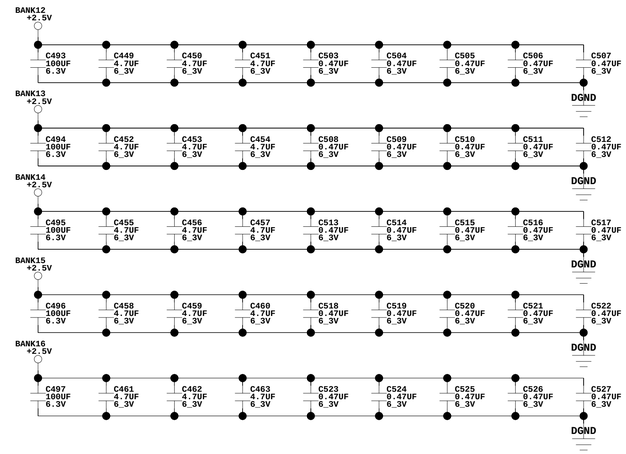

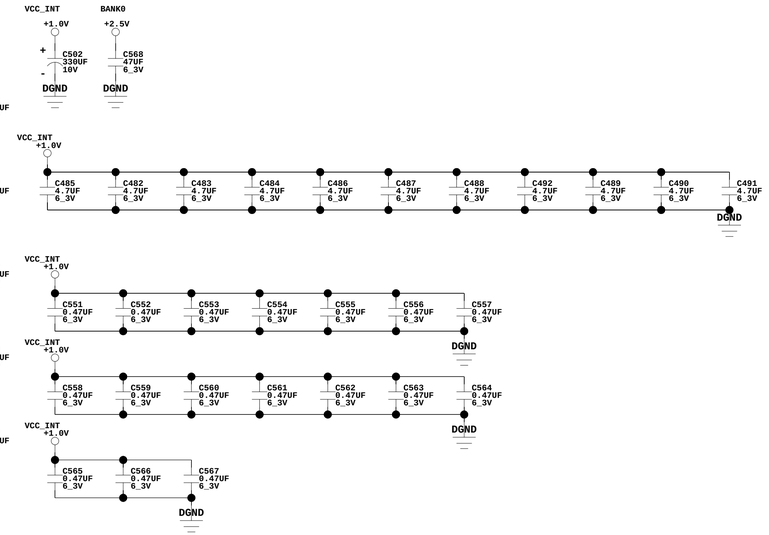

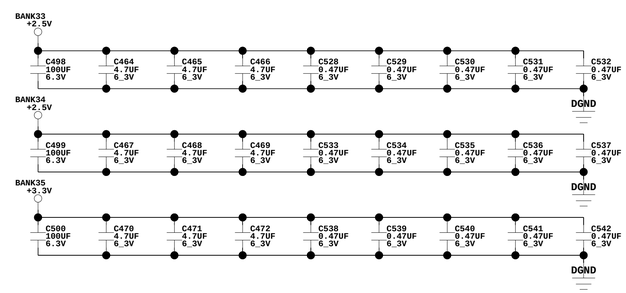

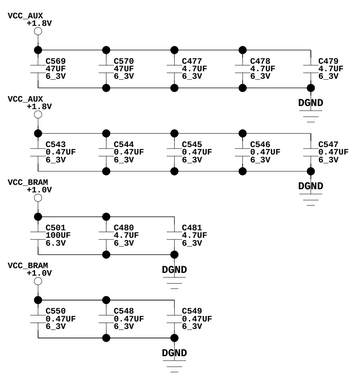

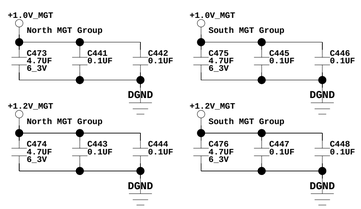

11/10/2013:10:00

SLAC NATIONAL ACCELERATOR LABORATORY
U.S. DEPARTMENT OF ENERGY
STANFORD UNIVERSITY STANFORD, CALIFORNIA

PROPRIETARY DATA OF STANFORD UNIVERSITY AND/OR U.S. DEPARTMENT OF ENERGY. RECIPIENT SHALL NOT PUBLISH THE INFORMATION WITHIN UNLESS GRANTED SPECIFIC PERMISSION OF STANFORD UNIVERSITY.

		DATE	APPROVALS
ENGR	Benjamin Reese	2013	
DFTR			
CHKR			

HPS Front End Board
FPGA Power Block

LOCATED AT SHEET 1

SD-249-901-07-C00 D

REV	DESCRIPTION	DFTR	CHKR	ENGR APPV	DATE

+2.5V

U1

BANK12

part 2 of 14

VCCO=1.2-3.3V

xc7a100t_fgg676

W17	VCCO_12_W17	
AF26	VCCO_12_AF26	
AE19	VCCO_12_AE19	
AD22	VCCO_12_AD22	
AB18	VCCO_12_AB18	
AA21	VCCO_12_AA21	
AB22	NC_AB22	
AE25	NC_AE25	
AE26	NC_AE26	
AC22	NC_AC22	
AC23	NC_AC23	
AF24	NC_AF24	
AF25	NC_AF25	
AD25	NC_AD25	
AD26	NC_AD26	
AE23	NC_AE23	
AF23	NC_AF23	
AD23	NC_AD23	
AD24	NC_AD24	
AD21	NC_AD21	
AE21	NC_AE21	
AF19	NC_AF19	
AF20	NC_AF20	
AE22	NC_AE22	
AF22	NC_AF22	
AD20	NC_AD20	
AE20	NC_AE20	
AB21	NC_AB21	
AC21	NC_AC21	
AA20	NC_AA20	
AB20	NC_AB20	
AA19	NC_AA19	
AB19	NC_AB19	
AC19	NC_AC19	
AD19	NC_AD19	
AC18	NC_AC18	
AD18	NC_AD18	
AE18	NC_AE18	
AF18	NC_AF18	
Y18	NC_Y18	
AA18	NC_AA18	
AE17	NC_AE17	
AF17	NC_AF17	
AA17	NC_AA17	
AB17	NC_AB17	
AC17	NC_AC17	
AD17	NC_AD17	
Y16	NC_Y16	
Y17	NC_Y17	
AB16	NC_AB16	
AC16	NC_AC16	
Y15	NC_Y15	
AA15	NC_AA15	
W14	NC_W14	
W15	NC_W15	
W16	NC_W16	

+2.5V

U1

BANK33

part 7 of 14

VCCO=1.2-3.3V

xc7a100t_fgg676

Y4	VCCO_33_Y4	
W7	VCCO_33_W7	
U3	VCCO_33_U3	
AD2	VCCO_33_AD2	
AC5	VCCO_33_AC5	
AA1	VCCO_33_AA1	
V4	NC_V4	
V1	NC_V1	
W1	NC_W1	
W5	NC_W5	
W4	NC_W4	
V3	NC_V3	
V2	NC_V2	
V6	NC_V6	
W6	NC_W6	
W3	NC_W3	
Y3	NC_Y3	
U7	NC_U7	
V7	NC_V7	
AB1	NC_AB1	
AC1	NC_AC1	
Y2	NC_Y2	
Y1	NC_Y1	
AD1	NC_AD1	
AE1	NC_AE1	
AE2	NC_AE2	
AF2	NC_AF2	
AB2	NC_AB2	
AC2	NC_AC2	
AA3	NC_AA3	
AA2	NC_AA2	
AA4	NC_AA4	
AB4	NC_AB4	
AC3	NC_AC3	
AD3	NC_AD3	
AD5	NC_AD5	
AE5	NC_AE5	
AE3	NC_AE3	
AF3	NC_AF3	
AF5	NC_AF5	
AF4	NC_AF4	
AC4	NC_AC4	
AD4	NC_AD4	
Y7	NC_Y7	
AA7	NC_AA7	
Y6	NC_Y6	
Y5	NC_Y5	
V8	NC_V8	
W8	NC_W8	
AA5	NC_AA5	
AB5	NC_AB5	
Y8	NC_Y8	
AA8	NC_AA8	
AB6	NC_AB6	
AC6	NC_AC6	
V9	NC_V9	

20/09/2013:14:02

SLAC NATIONAL ACCELERATOR LABORATORY

U.S. DEPARTMENT OF ENERGY

STANFORD UNIVERSITY STANFORD, CALIFORNIA

PROPRIETARY DATA OF STANFORD UNIVERSITY AND/OR U.S. DEPARTMENT OF ENERGY. RECIPIENT SHALL NOT PUBLISH THE INFORMATION WITHIN UNLESS GRANTED SPECIFIC PERMISSION OF STANFORD UNIVERSITY.

		DATE	APPROVALS
ENGR	Benjamin Reese	2013	
DFTR			
CHKR			

HPS Front End Board

FPGA Unused Banks

LOCATED AT SHEET 1

SD-249-901-07-C00

D

REV	DESCRIPTION	DFTR	CHKR	ENGR APPV	DATE

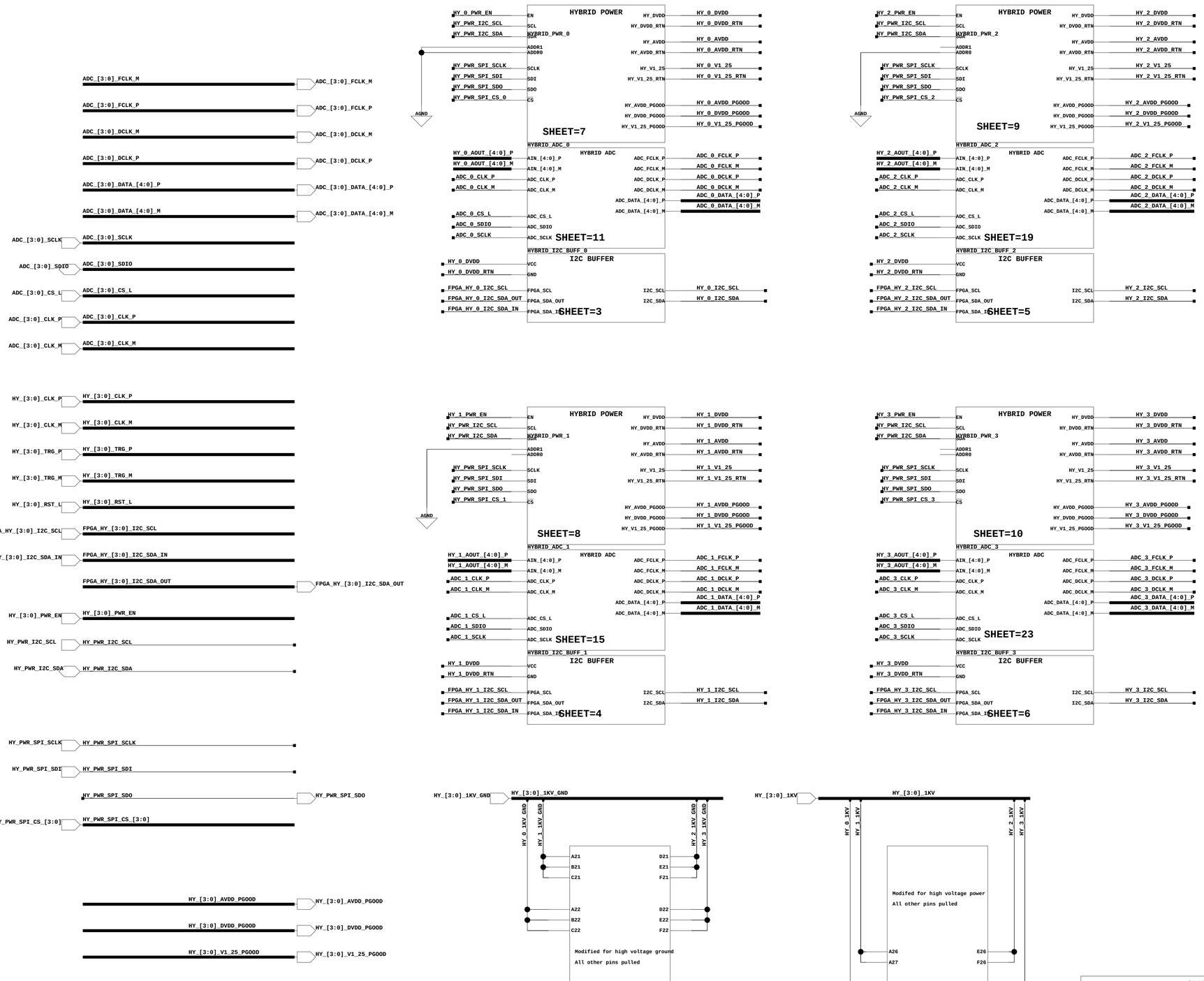

09/10/2013:09:20

SLAC NATIONAL ACCELERATOR LABORATORY
U.S. DEPARTMENT OF ENERGY
STANFORD UNIVERSITY STANFORD, CALIFORNIA

PROPRIETARY DATA OF STANFORD UNIVERSITY AND/OR U.S. DEPARTMENT OF ENERGY. RECIPIENT SHALL NOT PUBLISH THE INFORMATION WITHIN UNLESS GRANTED SPECIFIC PERMISSION OF STANFORD UNIVERSITY.

		DATE	APPROVALS
ENGR	Benjamin Reese	2013	
DFTR			
CHKR			

HPS Front End Board
Hybrid IO Block

LOCATED AT SHEET 1

SD-249-901-07-C00 D

REV	DESCRIPTION	DFTR	CHKR	ENGR APPV	DATE

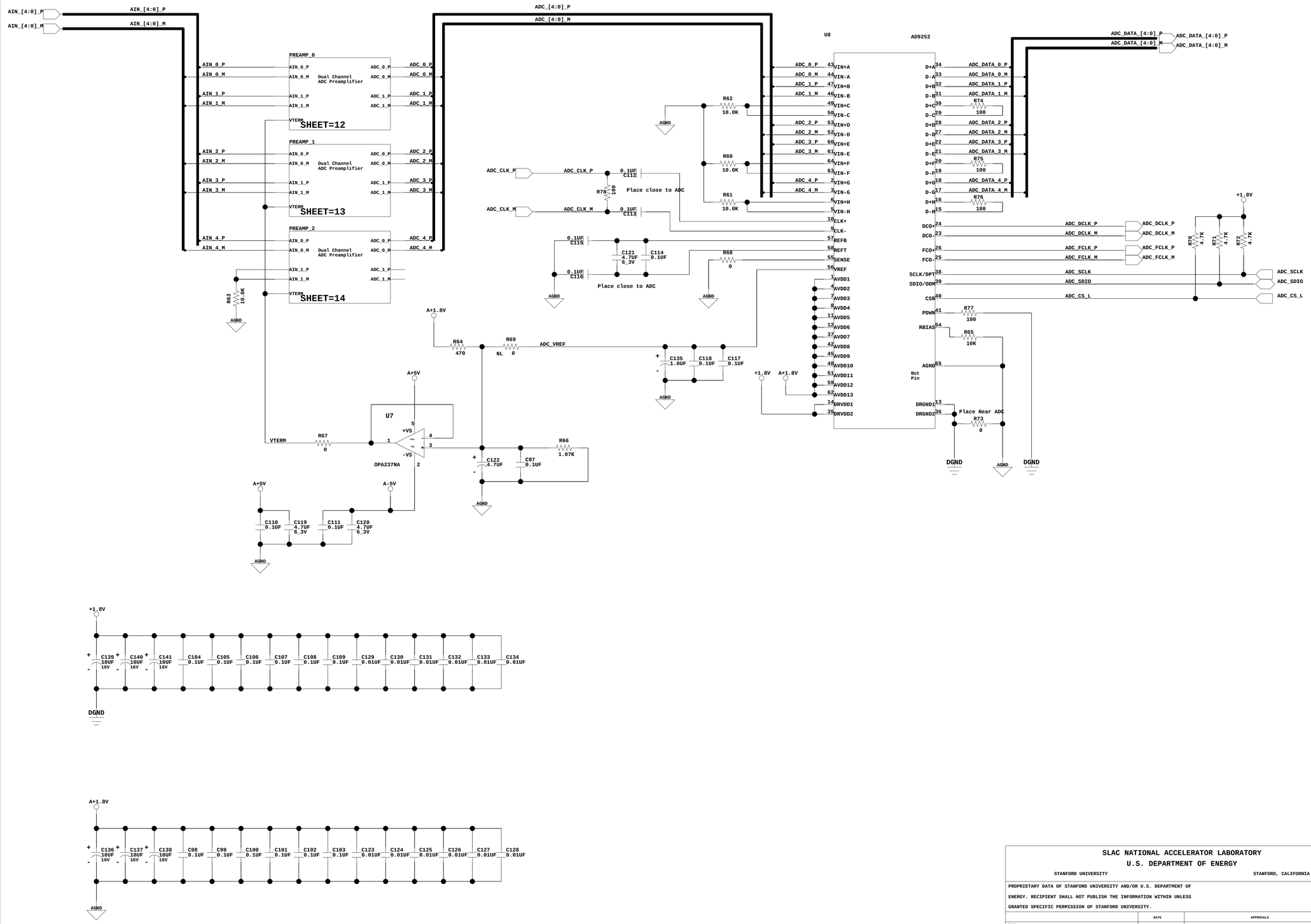

11/10/2013:10:00

SLAC NATIONAL ACCELERATOR LABORATORY
U.S. DEPARTMENT OF ENERGY
STANFORD UNIVERSITY STANFORD, CALIFORNIA

PROPRIETARY DATA OF STANFORD UNIVERSITY AND/OR U.S. DEPARTMENT OF ENERGY. RECIPIENT SHALL NOT PUBLISH THE INFORMATION WITHIN UNLESS GRANTED SPECIFIC PERMISSION OF STANFORD UNIVERSITY.

		DATE	APPROVALS
ENGR	Benjamin Reese	2013	
DFTR			
CHKR			

HPS Front End Board
Hybrid ADC Block

LOCATED AT SHEET 2

SD-249-901-07-C00 D

REV	DESCRIPTION	DFTR	CHKR	ENGR APPV	DATE

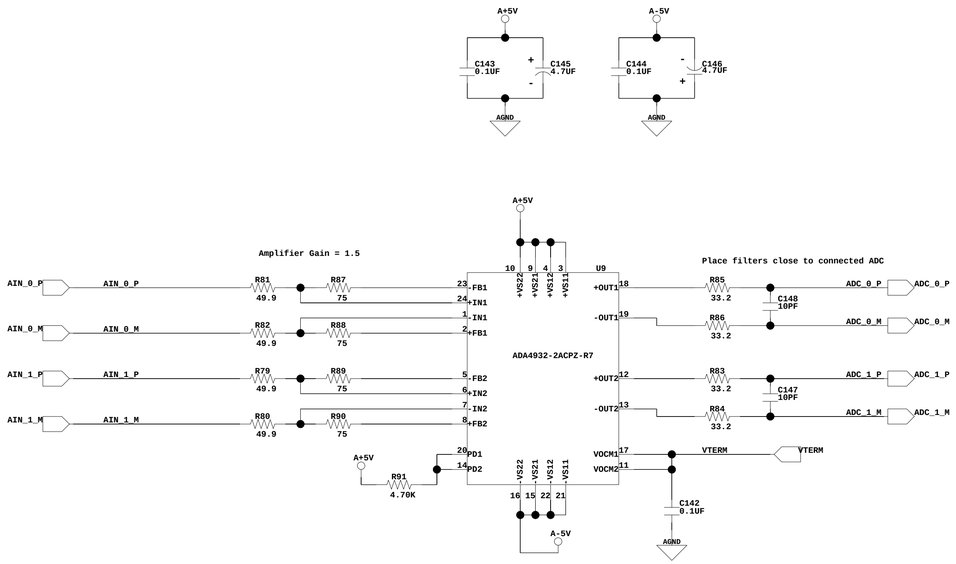

11/10/2013:09:59

SLAC NATIONAL ACCELERATOR LABORATORY
U.S. DEPARTMENT OF ENERGY
STANFORD UNIVERSITY STANFORD, CALIFORNIA

PROPRIETARY DATA OF STANFORD UNIVERSITY AND/OR U.S. DEPARTMENT OF ENERGY. RECIPIENT SHALL NOT PUBLISH THE INFORMATION WITHIN UNLESS GRANTED SPECIFIC PERMISSION OF STANFORD UNIVERSITY.

		DATE	APPROVALS
ENGR	Benjamin Reese	2013	
DFTR			
CHKR			

HPS Front End Board
ADC Dual Pre-amplifier Block

LOCATED AT SHEET 11

SD-249-901-07-C00 D

REV	DESCRIPTION	DFTR	CHKR	ENGR APPV	DATE

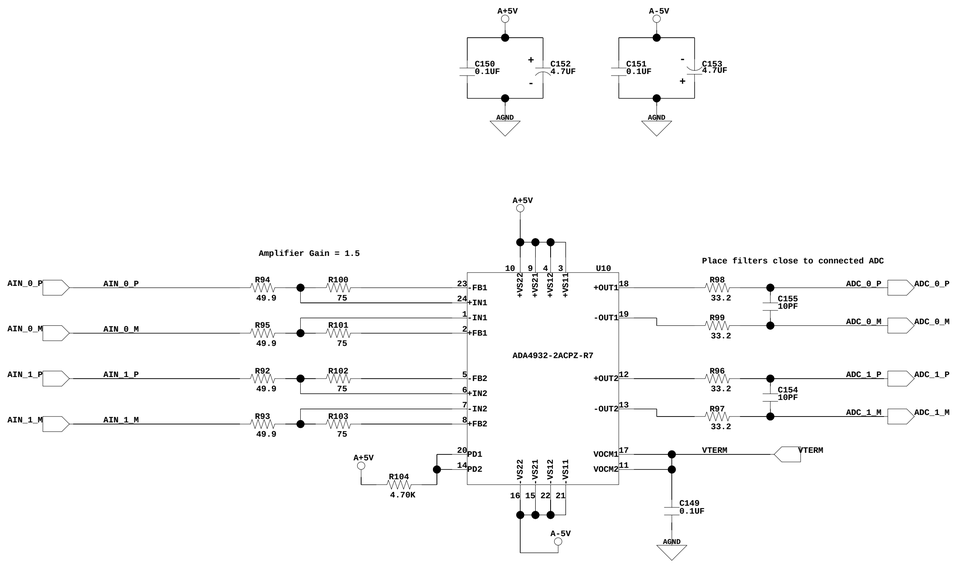

11/10/2013:09:59

SLAC NATIONAL ACCELERATOR LABORATORY
U.S. DEPARTMENT OF ENERGY
STANFORD UNIVERSITY STANFORD, CALIFORNIA

PROPRIETARY DATA OF STANFORD UNIVERSITY AND/OR U.S. DEPARTMENT OF ENERGY. RECIPIENT SHALL NOT PUBLISH THE INFORMATION WITHIN UNLESS GRANTED SPECIFIC PERMISSION OF STANFORD UNIVERSITY.

		DATE	APPROVALS
ENGR	Benjamin Reese	2013	
DFTR			
CHKR			

HPS Front End Board
ADC Dual Pre-amplifier Block

LOCATED AT SHEET 11

SD-249-901-07-C00 D

REV	DESCRIPTION	DFTR	CHKR	ENGR APPV	DATE

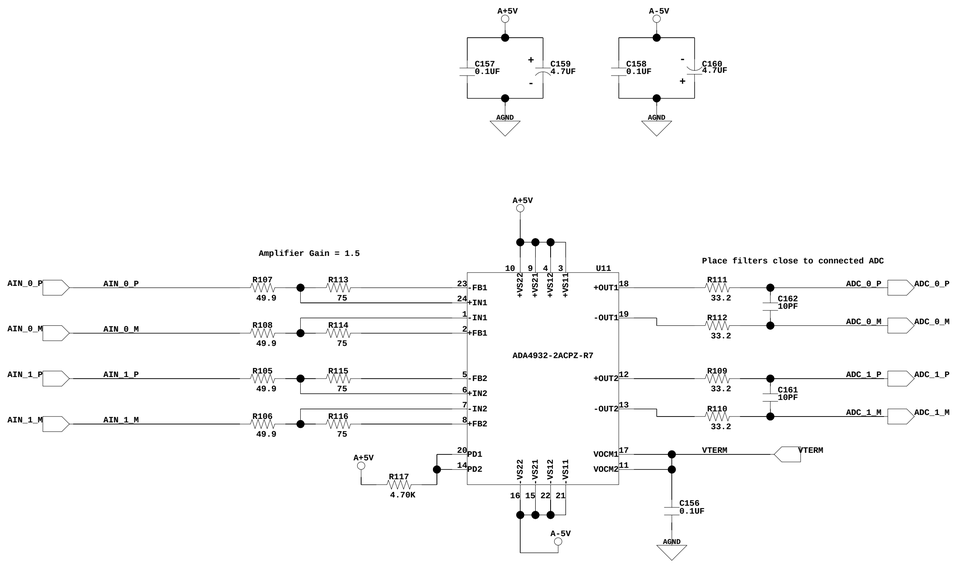

11/10/2013:09:59

SLAC NATIONAL ACCELERATOR LABORATORY
U.S. DEPARTMENT OF ENERGY
STANFORD UNIVERSITY STANFORD, CALIFORNIA

PROPRIETARY DATA OF STANFORD UNIVERSITY AND/OR U.S. DEPARTMENT OF ENERGY. RECIPIENT SHALL NOT PUBLISH THE INFORMATION WITHIN UNLESS GRANTED SPECIFIC PERMISSION OF STANFORD UNIVERSITY.

		DATE	APPROVALS
ENGR	Benjamin Reese	2013	
DFTR			
CHKR			

HPS Front End Board
ADC Dual Pre-amplifier Block

LOCATED AT SHEET 11

SD-249-901-07-C00 D

REV	DESCRIPTION	DFTR	CHKR	ENGR APPV	DATE

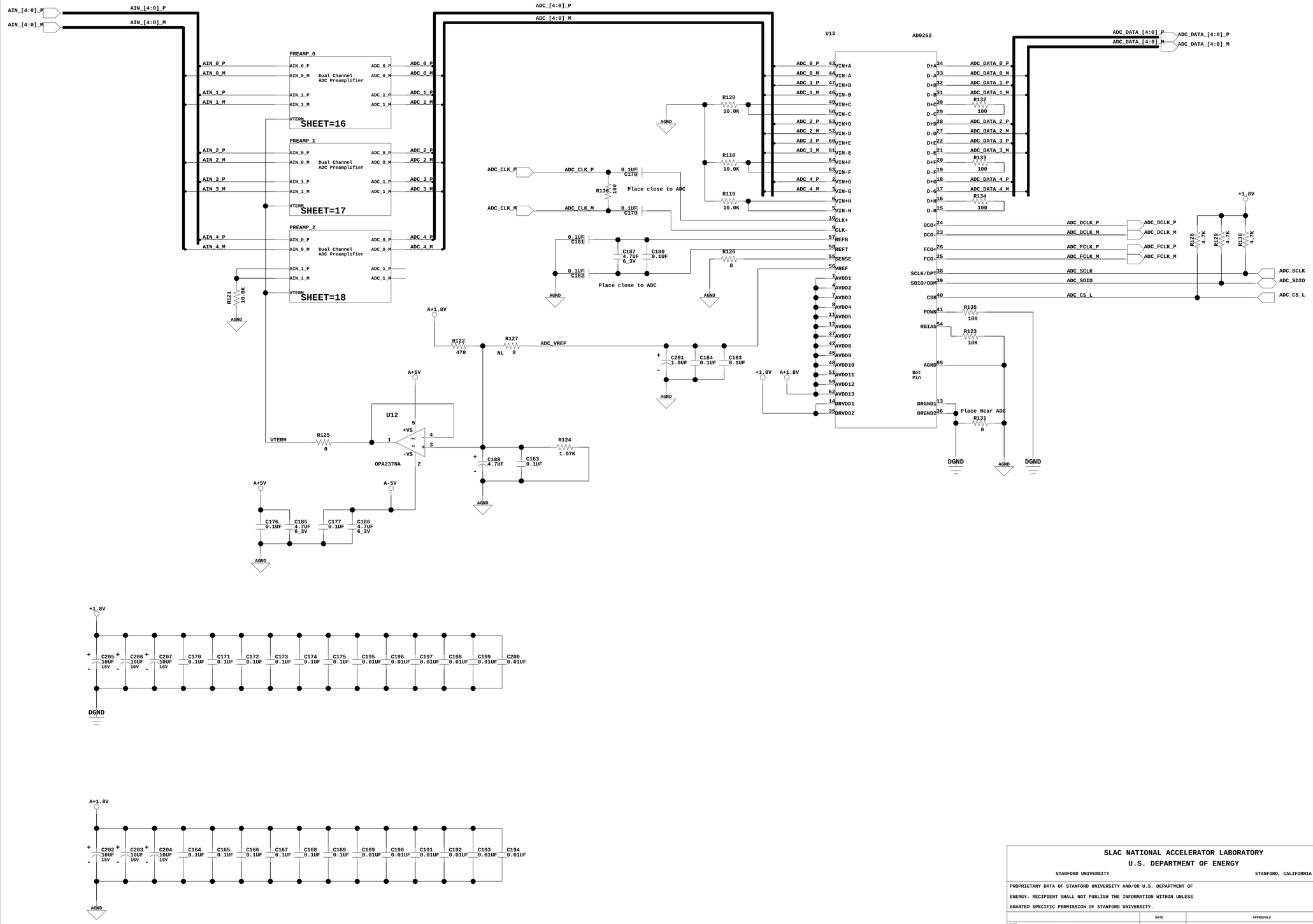

11/10/2013:10:00

SLAC NATIONAL ACCELERATOR LABORATORY
U.S. DEPARTMENT OF ENERGY
STANFORD UNIVERSITY STANFORD, CALIFORNIA

PROPRIETARY DATA OF STANFORD UNIVERSITY AND/OR U.S. DEPARTMENT OF ENERGY. RECIPIENT SHALL NOT PUBLISH THE INFORMATION WITHIN UNLESS GRANTED SPECIFIC PERMISSION OF STANFORD UNIVERSITY.

		DATE	APPROVALS
ENGR	Benjamin Reese	2013	
DFTR			
CHKR			

HPS Front End Board
Hybrid ADC Block

LOCATED AT SHEET 2

SD-249-901-07-C00 D

REV	DESCRIPTION	DFTR	CHKR	ENGR APPV	DATE

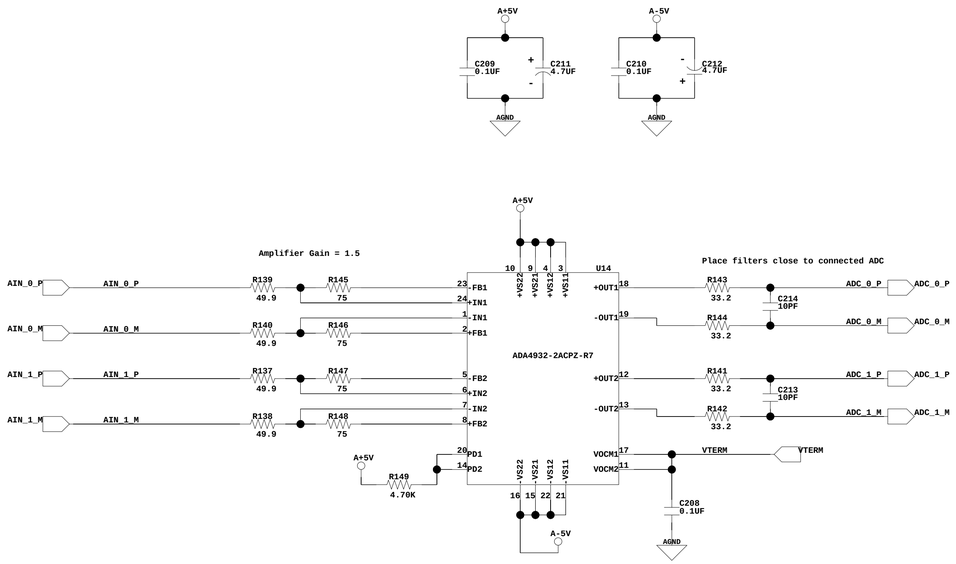

11/10/2013:09:59

SLAC NATIONAL ACCELERATOR LABORATORY
U.S. DEPARTMENT OF ENERGY
STANFORD UNIVERSITY STANFORD, CALIFORNIA

PROPRIETARY DATA OF STANFORD UNIVERSITY AND/OR U.S. DEPARTMENT OF ENERGY. RECIPIENT SHALL NOT PUBLISH THE INFORMATION WITHIN UNLESS GRANTED SPECIFIC PERMISSION OF STANFORD UNIVERSITY.

		DATE	APPROVALS
ENGR	Benjamin Reese	2013	
DFTR			
CHKR			

HPS Front End Board
ADC Dual Pre-amplifier Block

LOCATED AT SHEET 15

SD-249-901-07-C00 D

REV	DESCRIPTION	DFTR	CHKR	ENGR APPV	DATE

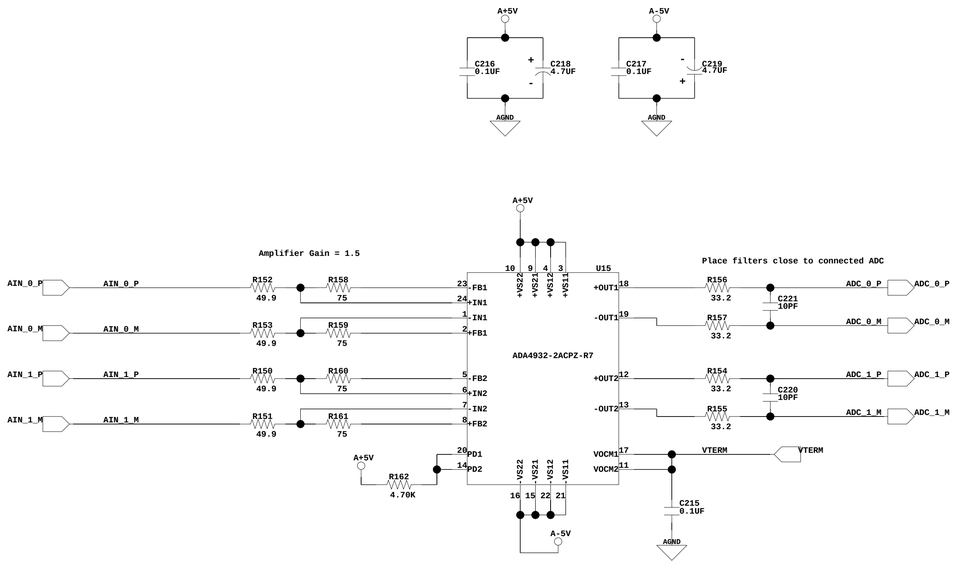

11/10/2013:09:59

SLAC NATIONAL ACCELERATOR LABORATORY
U.S. DEPARTMENT OF ENERGY
STANFORD UNIVERSITY STANFORD, CALIFORNIA

PROPRIETARY DATA OF STANFORD UNIVERSITY AND/OR U.S. DEPARTMENT OF ENERGY. RECIPIENT SHALL NOT PUBLISH THE INFORMATION WITHIN UNLESS GRANTED SPECIFIC PERMISSION OF STANFORD UNIVERSITY.

		DATE	APPROVALS
ENGR	Benjamin Reese	2013	
DFTR			
CHKR			

HPS Front End Board
ADC Dual Pre-amplifier Block

LOCATED AT SHEET 15

SD-249-901-07-C00 D

REV	DESCRIPTION	DFTR	CHKR	ENGR APPV	DATE

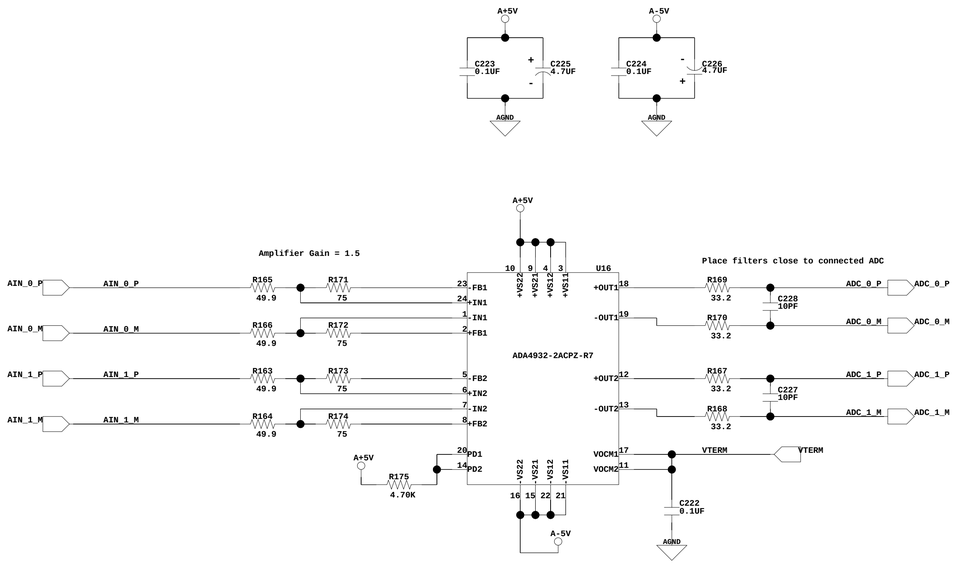

11/10/2013:09:59

SLAC NATIONAL ACCELERATOR LABORATORY
U.S. DEPARTMENT OF ENERGY
STANFORD UNIVERSITY STANFORD, CALIFORNIA

PROPRIETARY DATA OF STANFORD UNIVERSITY AND/OR U.S. DEPARTMENT OF ENERGY. RECIPIENT SHALL NOT PUBLISH THE INFORMATION WITHIN UNLESS GRANTED SPECIFIC PERMISSION OF STANFORD UNIVERSITY.

		DATE	APPROVALS
ENGR	Benjamin Reese	2013	
DFTR			
CHKR			

HPS Front End Board
ADC Dual Pre-amplifier Block

LOCATED AT SHEET 15

SD-249-901-07-C00 D

REV	DESCRIPTION	DFTR	CHKR	ENGR APPV	DATE

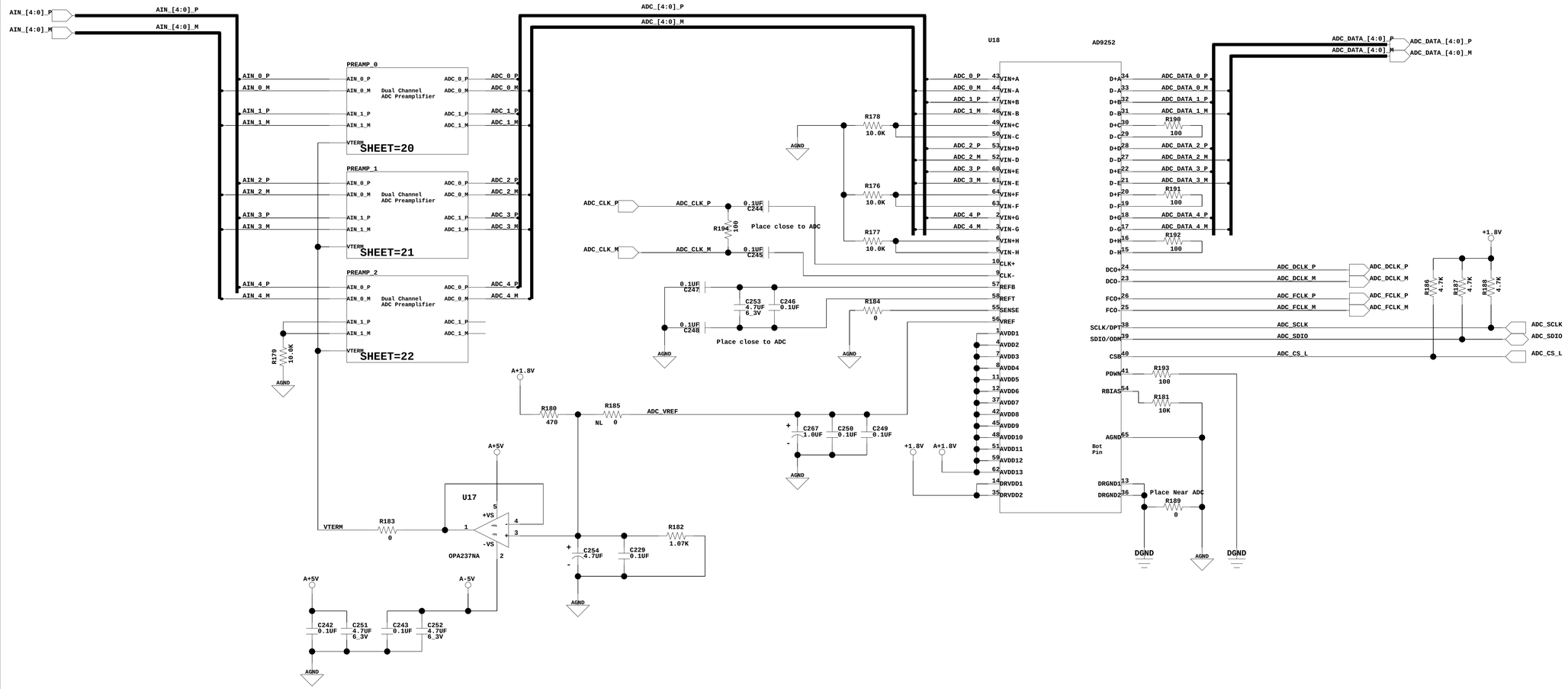

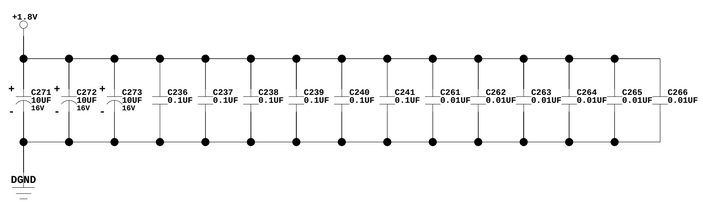

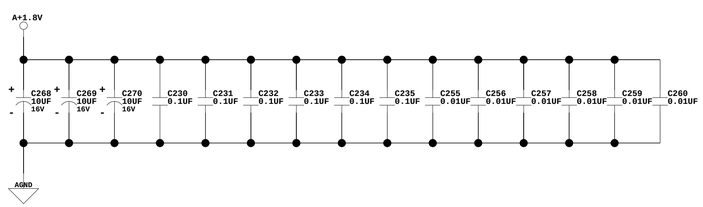

11/10/2013:10:00

SLAC NATIONAL ACCELERATOR LABORATORY
U.S. DEPARTMENT OF ENERGY
STANFORD UNIVERSITY STANFORD, CALIFORNIA

PROPRIETARY DATA OF STANFORD UNIVERSITY AND/OR U.S. DEPARTMENT OF ENERGY. RECIPIENT SHALL NOT PUBLISH THE INFORMATION WITHIN UNLESS GRANTED SPECIFIC PERMISSION OF STANFORD UNIVERSITY.

		DATE	APPROVALS
ENGR	Benjamin Reese	2013	
DFTR			
CHKR			

HPS Front End Board
Hybrid ADC Block

LOCATED AT SHEET 2

SD-249-901-07-C00 D

REV	DESCRIPTION	DFTR	CHKR	ENGR APPV	DATE

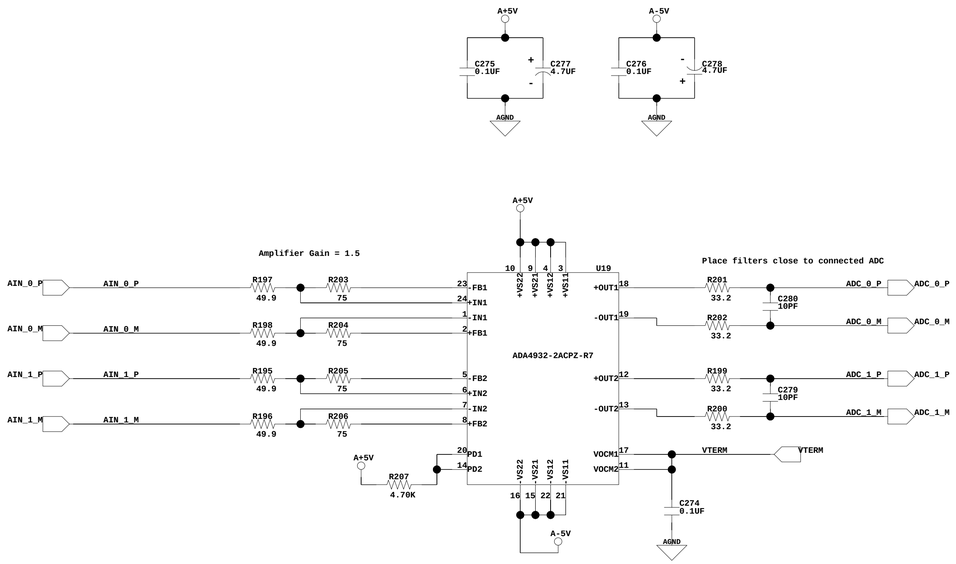

11/10/2013:09:59

SLAC NATIONAL ACCELERATOR LABORATORY
U.S. DEPARTMENT OF ENERGY
STANFORD UNIVERSITY STANFORD, CALIFORNIA

PROPRIETARY DATA OF STANFORD UNIVERSITY AND/OR U.S. DEPARTMENT OF ENERGY. RECIPIENT SHALL NOT PUBLISH THE INFORMATION WITHIN UNLESS GRANTED SPECIFIC PERMISSION OF STANFORD UNIVERSITY.

		DATE	APPROVALS
ENGR	Benjamin Reese	2013	
DFTR			
CHKR			

HPS Front End Board
ADC Dual Pre-amplifier Block

LOCATED AT SHEET 19

SD-249-901-07-C00 D

REV	DESCRIPTION	DFTR	CHKR	ENGR APPV	DATE

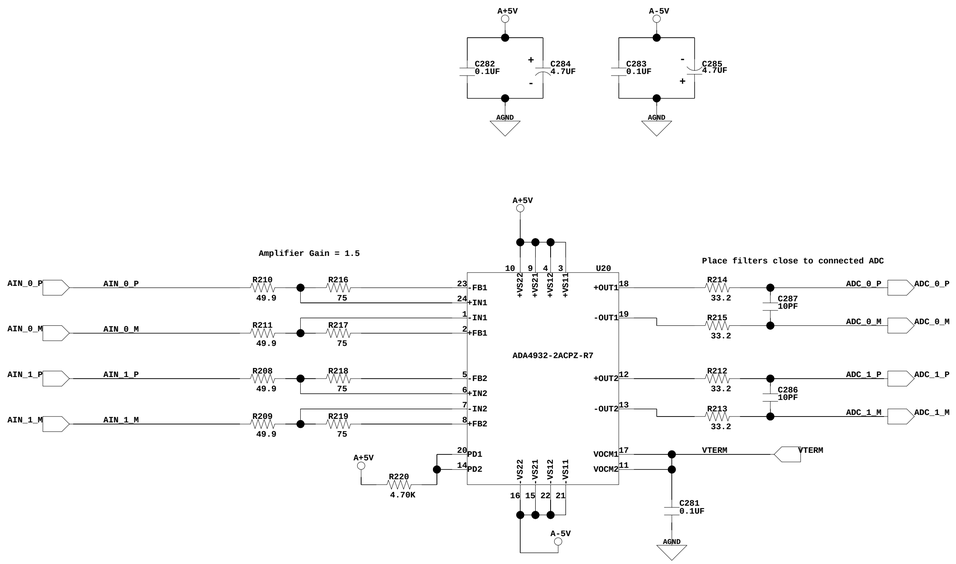

11/10/2013:09:59

SLAC NATIONAL ACCELERATOR LABORATORY
U.S. DEPARTMENT OF ENERGY
STANFORD UNIVERSITY STANFORD, CALIFORNIA

PROPRIETARY DATA OF STANFORD UNIVERSITY AND/OR U.S. DEPARTMENT OF ENERGY. RECIPIENT SHALL NOT PUBLISH THE INFORMATION WITHIN UNLESS GRANTED SPECIFIC PERMISSION OF STANFORD UNIVERSITY.

		DATE	APPROVALS
ENGR	Benjamin Reese	2013	
DFTR			
CHKR			

HPS Front End Board
ADC Dual Pre-amplifier Block

LOCATED AT SHEET 19

SD-249-901-07-C00 D

REV	DESCRIPTION	DFTR	CHKR	ENGR APPV	DATE

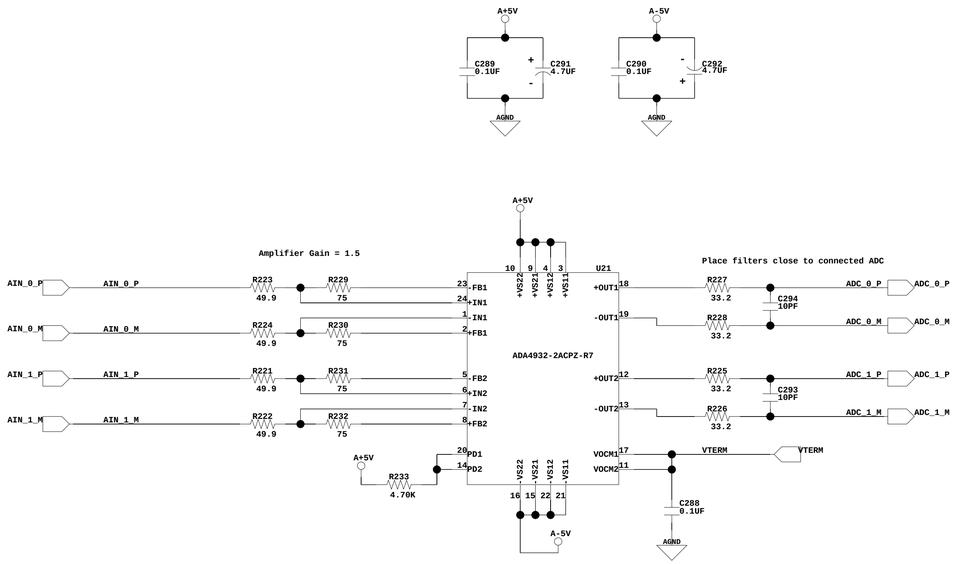

11/10/2013:09:59

SLAC NATIONAL ACCELERATOR LABORATORY
U.S. DEPARTMENT OF ENERGY
STANFORD UNIVERSITY STANFORD, CALIFORNIA

PROPRIETARY DATA OF STANFORD UNIVERSITY AND/OR U.S. DEPARTMENT OF ENERGY. RECIPIENT SHALL NOT PUBLISH THE INFORMATION WITHIN UNLESS GRANTED SPECIFIC PERMISSION OF STANFORD UNIVERSITY.

		DATE	APPROVALS
ENGR	Benjamin Reese	2013	
DFTR			
CHKR			

HPS Front End Board
ADC Dual Pre-amplifier Block

LOCATED AT SHEET 19

SD-249-901-07-C00 D

REV	DESCRIPTION	DFTR	CHKR	ENGR APPV	DATE

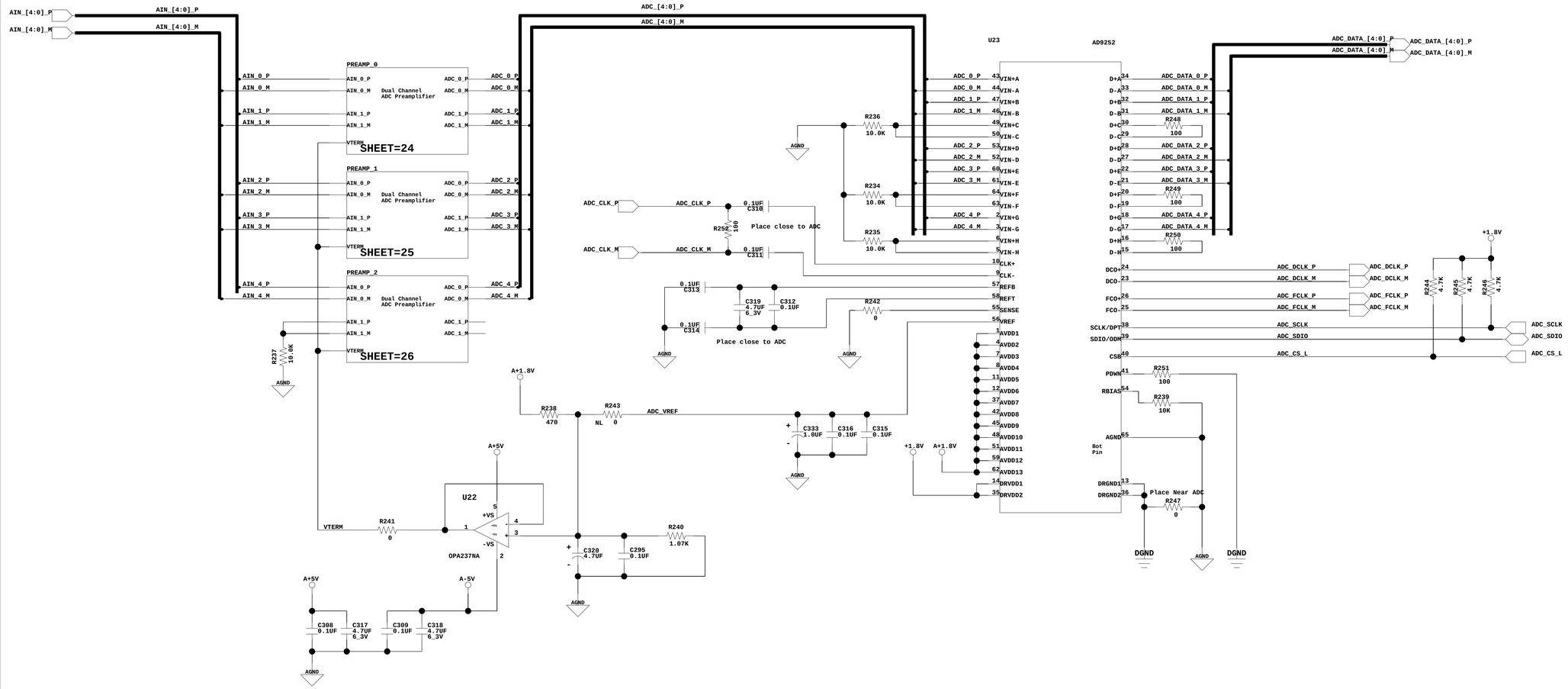

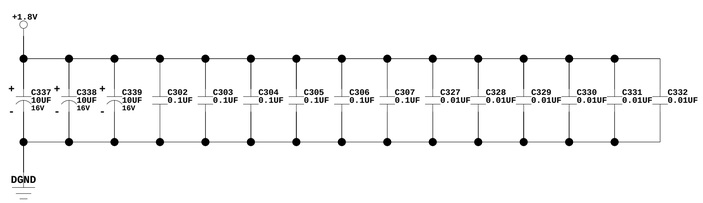

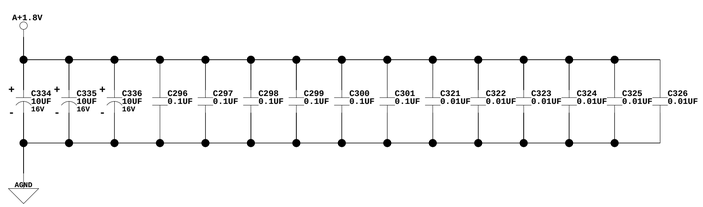

11/10/2013:10:00

SLAC NATIONAL ACCELERATOR LABORATORY
U.S. DEPARTMENT OF ENERGY
STANFORD UNIVERSITY — STANFORD, CALIFORNIA

PROPRIETARY DATA OF STANFORD UNIVERSITY AND/OR U.S. DEPARTMENT OF ENERGY. RECIPIENT SHALL NOT PUBLISH THE INFORMATION WITHIN UNLESS GRANTED SPECIFIC PERMISSION OF STANFORD UNIVERSITY.

		DATE	APPROVALS
ENGR	Benjamin Reese	2013	
DFTR			
CHKR			

HPS Front End Board
Hybrid ADC Block

LOCATED AT SHEET 2

SD-249-901-07-C00 — D

REV	DESCRIPTION	DFTR	CHKR	ENGR APPV	DATE

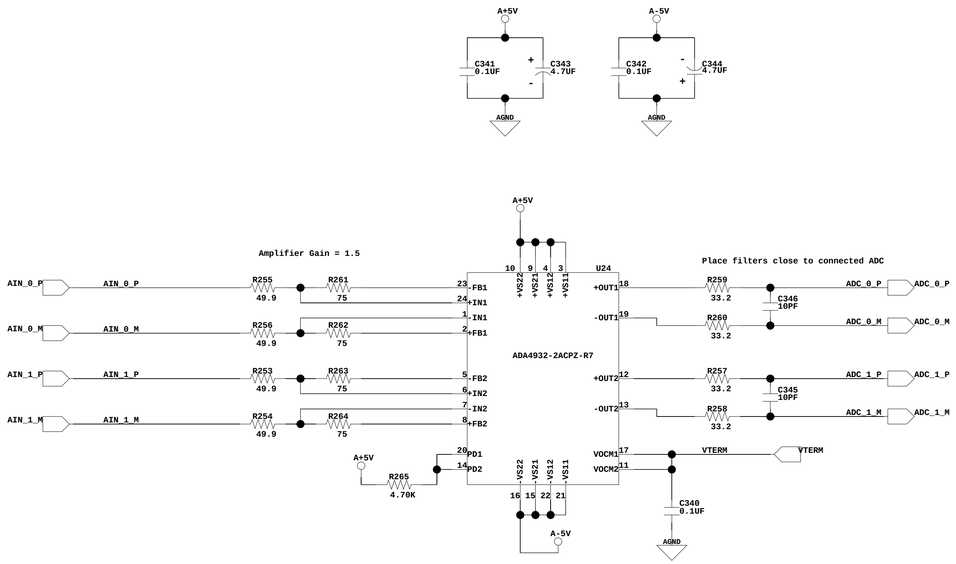

11/10/2013:09:59

SLAC NATIONAL ACCELERATOR LABORATORY
U.S. DEPARTMENT OF ENERGY
STANFORD UNIVERSITY STANFORD, CALIFORNIA

PROPRIETARY DATA OF STANFORD UNIVERSITY AND/OR U.S. DEPARTMENT OF ENERGY. RECIPIENT SHALL NOT PUBLISH THE INFORMATION WITHIN UNLESS GRANTED SPECIFIC PERMISSION OF STANFORD UNIVERSITY.

		DATE	APPROVALS
ENGR	Benjamin Reese	2013	
DFTR			
CHKR			

HPS Front End Board
ADC Dual Pre-amplifier Block

LOCATED AT SHEET 23

SD-249-901-07-C00 D

REV	DESCRIPTION	DFTR	CHKR	ENGR APPV	DATE

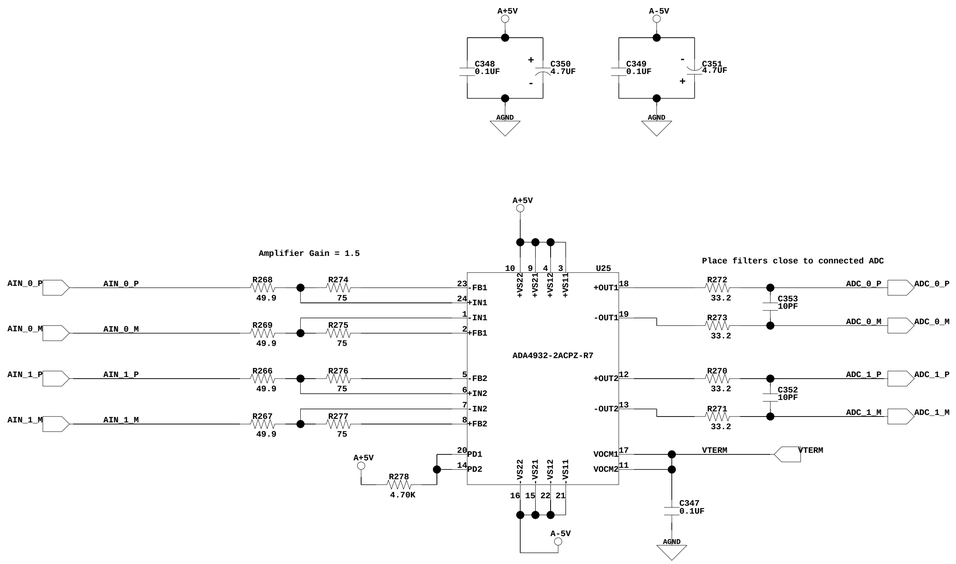

11/10/2013:09:59

SLAC NATIONAL ACCELERATOR LABORATORY
U.S. DEPARTMENT OF ENERGY
STANFORD UNIVERSITY STANFORD, CALIFORNIA

PROPRIETARY DATA OF STANFORD UNIVERSITY AND/OR U.S. DEPARTMENT OF ENERGY. RECIPIENT SHALL NOT PUBLISH THE INFORMATION WITHIN UNLESS GRANTED SPECIFIC PERMISSION OF STANFORD UNIVERSITY.

		DATE	APPROVALS
ENGR	Benjamin Reese	2013	
DFTR			
CHKR			

HPS Front End Board
ADC Dual Pre-amplifier Block

LOCATED AT SHEET 23

SD-249-901-07-C00 D

REV	DESCRIPTION	DFTR	CHKR	ENGR APPV	DATE

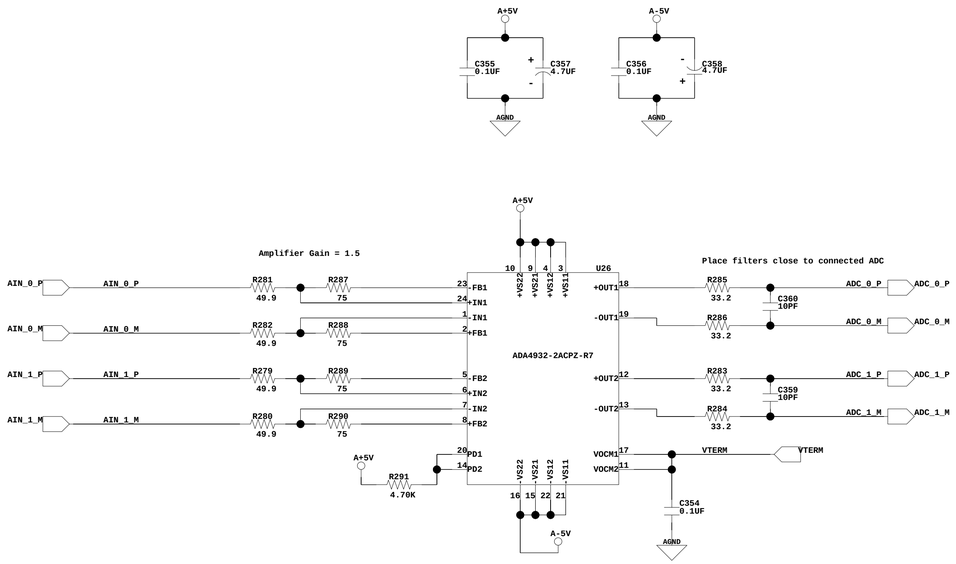

11/10/2013:09:59

SLAC NATIONAL ACCELERATOR LABORATORY
U.S. DEPARTMENT OF ENERGY
STANFORD UNIVERSITY STANFORD, CALIFORNIA

PROPRIETARY DATA OF STANFORD UNIVERSITY AND/OR U.S. DEPARTMENT OF ENERGY. RECIPIENT SHALL NOT PUBLISH THE INFORMATION WITHIN UNLESS GRANTED SPECIFIC PERMISSION OF STANFORD UNIVERSITY.

		DATE	APPROVALS
ENGR	Benjamin Reese	2013	
DFTR			
CHKR			

HPS Front End Board
ADC Dual Pre-amplifier Block

LOCATED AT SHEET 23

SD-249-901-07-C00 D

REV	DESCRIPTION	DFTR	CHKR	ENGR APPV	DATE

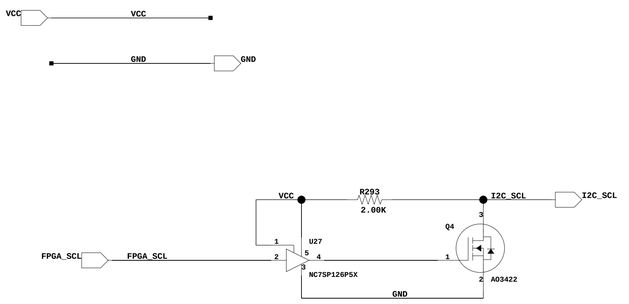

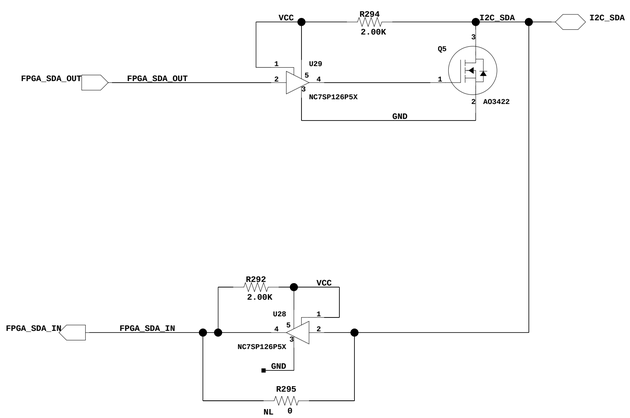

SLAC NATIONAL ACCELERATOR LABORATORY
U.S. DEPARTMENT OF ENERGY
STANFORD UNIVERSITY STANFORD, CALIFORNIA

PROPRIETARY DATA OF STANFORD UNIVERSITY AND/OR U.S. DEPARTMENT OF ENERGY. RECIPIENT SHALL NOT PUBLISH THE INFORMATION WITHIN UNLESS GRANTED SPECIFIC PERMISSION OF STANFORD UNIVERSITY.

		DATE	APPROVALS
ENGR	Benjamin Reese	2013	
DFTR			
CHKR			

HPS Front End Board

LOCATED AT SHEET 2

SD-249-901-07-C00 D

REV	DESCRIPTION	DFTR	CHKR	ENGR APPV	DATE

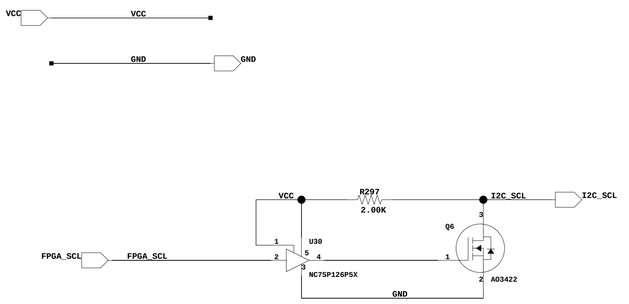

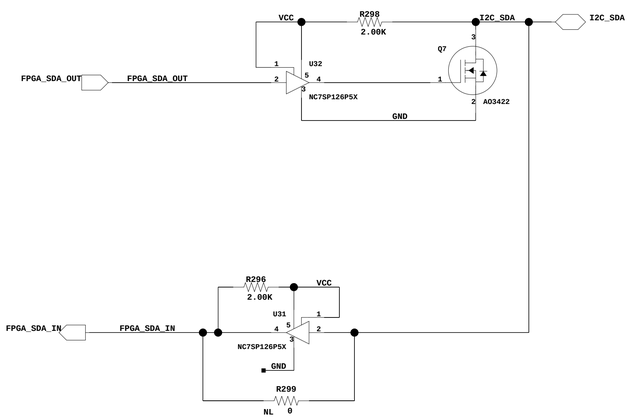

SLAC NATIONAL ACCELERATOR LABORATORY
U.S. DEPARTMENT OF ENERGY
STANFORD UNIVERSITY STANFORD, CALIFORNIA

PROPRIETARY DATA OF STANFORD UNIVERSITY AND/OR U.S. DEPARTMENT OF ENERGY. RECIPIENT SHALL NOT PUBLISH THE INFORMATION WITHIN UNLESS GRANTED SPECIFIC PERMISSION OF STANFORD UNIVERSITY.

		DATE	APPROVALS
ENGR	Benjamin Reese	2013	
DFTR			
CHKR			

HPS Front End Board

LOCATED AT SHEET 2

SD-249-901-07-C00

D

REV	DESCRIPTION	DFTR	CHKR	ENGR APPV	DATE

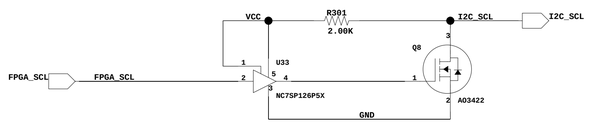

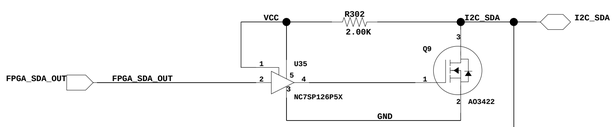

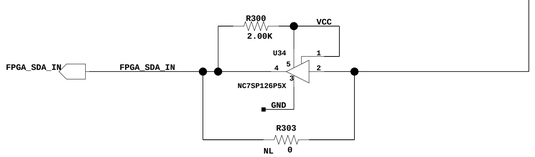

SLAC NATIONAL ACCELERATOR LABORATORY
U.S. DEPARTMENT OF ENERGY
STANFORD UNIVERSITY STANFORD, CALIFORNIA

PROPRIETARY DATA OF STANFORD UNIVERSITY AND/OR U.S. DEPARTMENT OF ENERGY. RECIPIENT SHALL NOT PUBLISH THE INFORMATION WITHIN UNLESS GRANTED SPECIFIC PERMISSION OF STANFORD UNIVERSITY.

		DATE	APPROVALS
ENGR	Benjamin Reese	2013	
DFTR			
CHKR			

HPS Front End Board

LOCATED AT SHEET 2

SD-249-901-07-C00

D

REV	DESCRIPTION	DFTR	CHKR	ENGR APPV	DATE

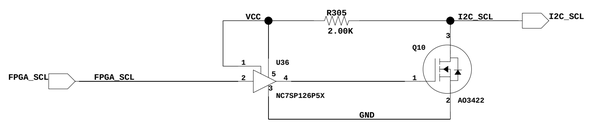

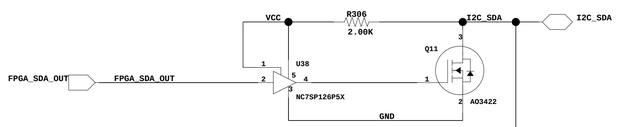

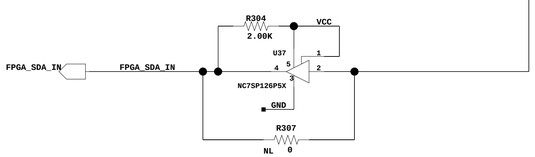

SLAC NATIONAL ACCELERATOR LABORATORY
U.S. DEPARTMENT OF ENERGY
STANFORD UNIVERSITY STANFORD, CALIFORNIA

PROPRIETARY DATA OF STANFORD UNIVERSITY AND/OR U.S. DEPARTMENT OF ENERGY. RECIPIENT SHALL NOT PUBLISH THE INFORMATION WITHIN UNLESS GRANTED SPECIFIC PERMISSION OF STANFORD UNIVERSITY.

		DATE	APPROVALS
ENGR	Benjamin Reese	2013	
DFTR			
CHKR			

HPS Front End Board

LOCATED AT SHEET 2

SD-249-901-07-C00 D

REV	DESCRIPTION	DFTR	CHKR	ENGR APPV	DATE

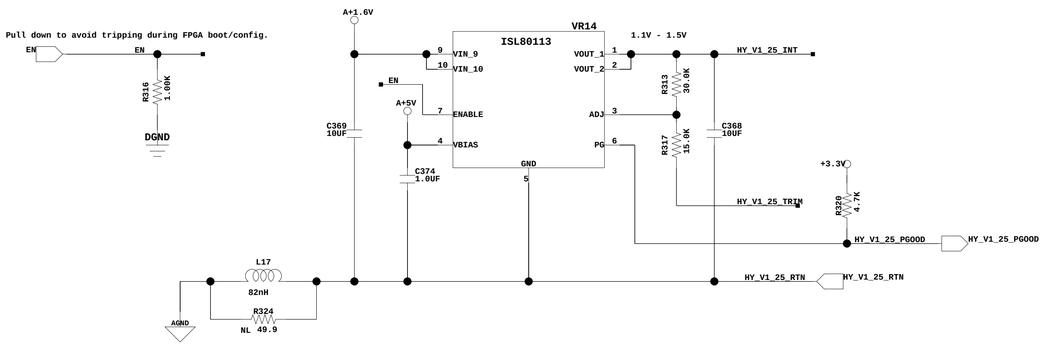

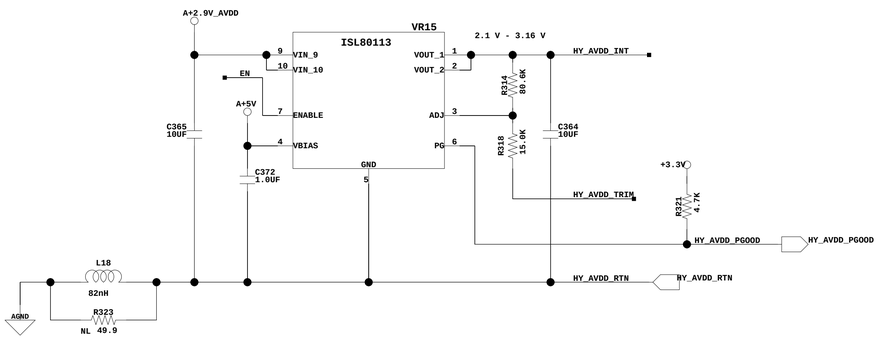

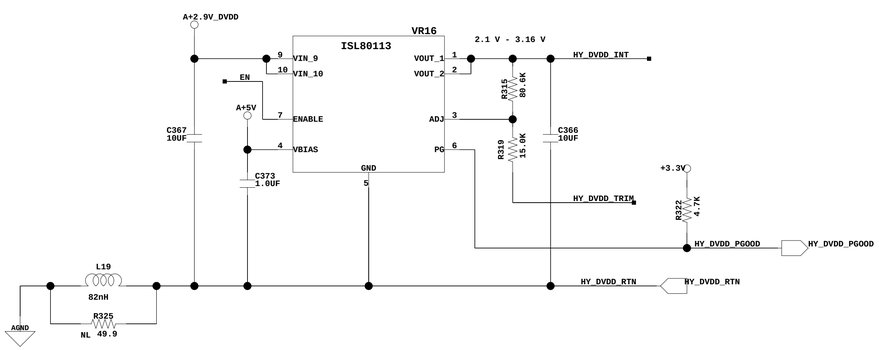

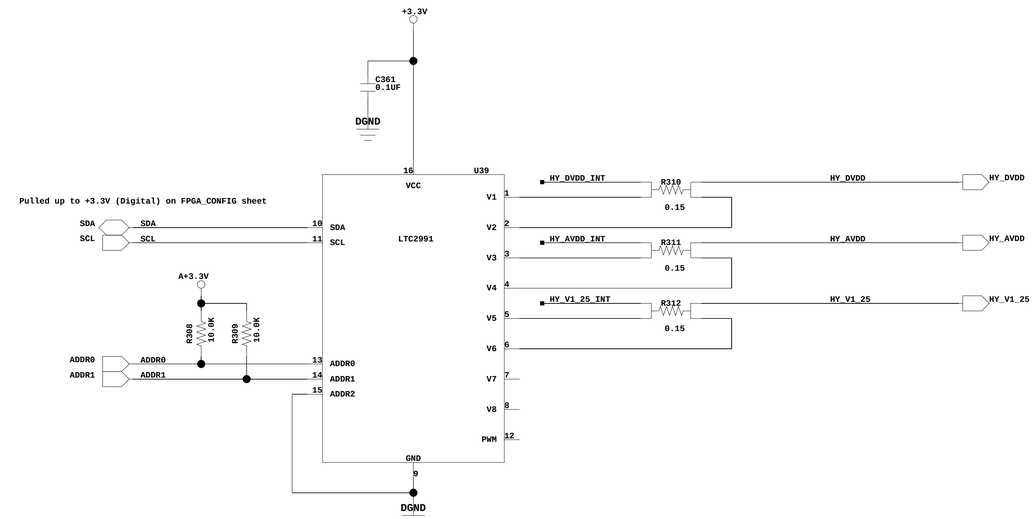

Route as thick power traces

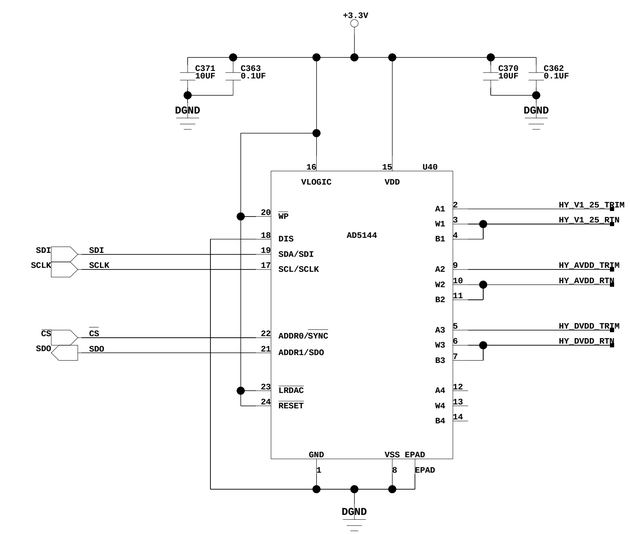

21/10/2013:16:03

SLAC NATIONAL ACCELERATOR LABORATORY
U.S. DEPARTMENT OF ENERGY
STANFORD UNIVERSITY STANFORD, CALIFORNIA

PROPRIETARY DATA OF STANFORD UNIVERSITY AND/OR U.S. DEPARTMENT OF ENERGY. RECIPIENT SHALL NOT PUBLISH THE INFORMATION WITHIN UNLESS GRANTED SPECIFIC PERMISSION OF STANFORD UNIVERSITY.

		DATE	APPROVALS
ENGR	Benjamin Reese	2013	
DFTR			
CHKR			

HPS Front End Board
Hybrid Power Block

LOCATED AT SHEET 2

SD-249-901-07-C00 D

REV	DESCRIPTION	DFTR	CHKR	ENGR APPV	DATE

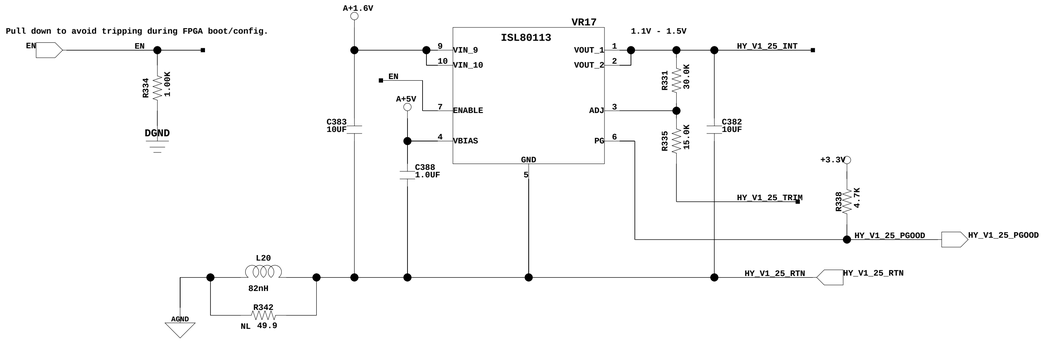

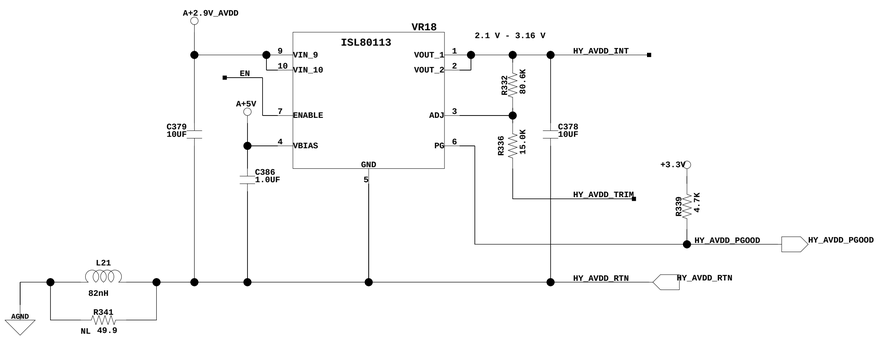

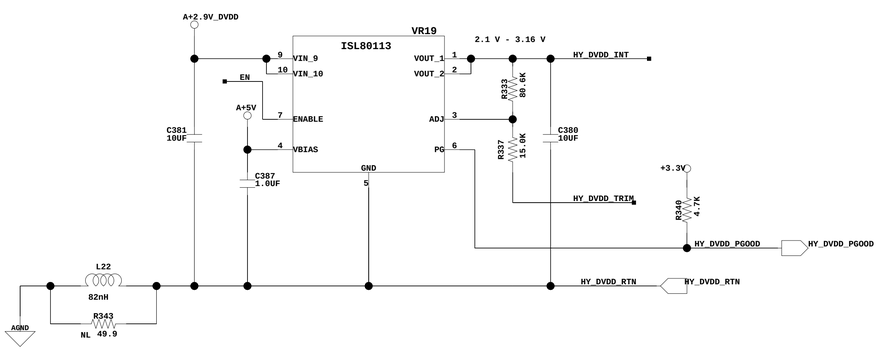

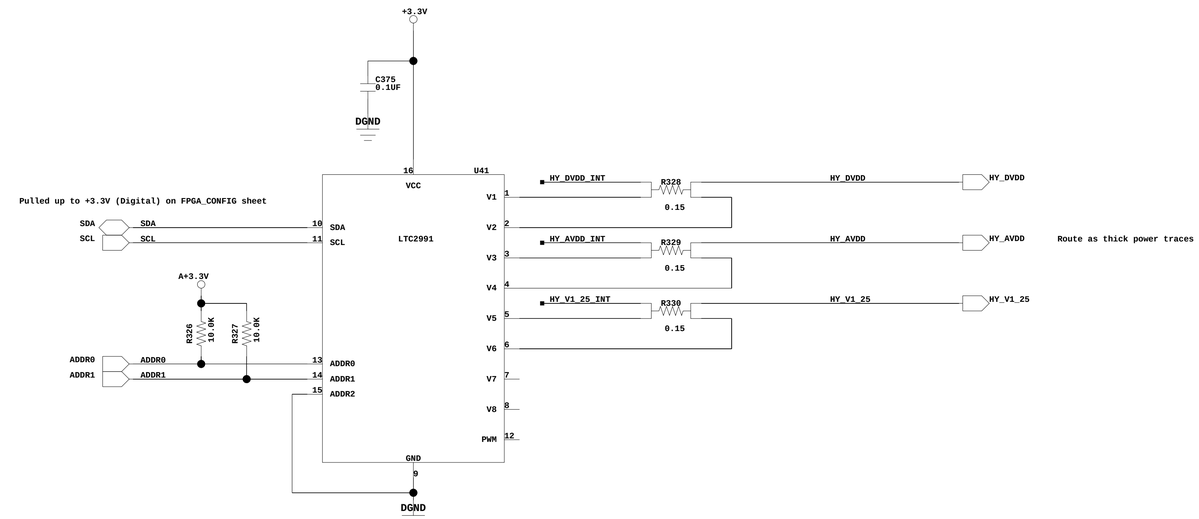

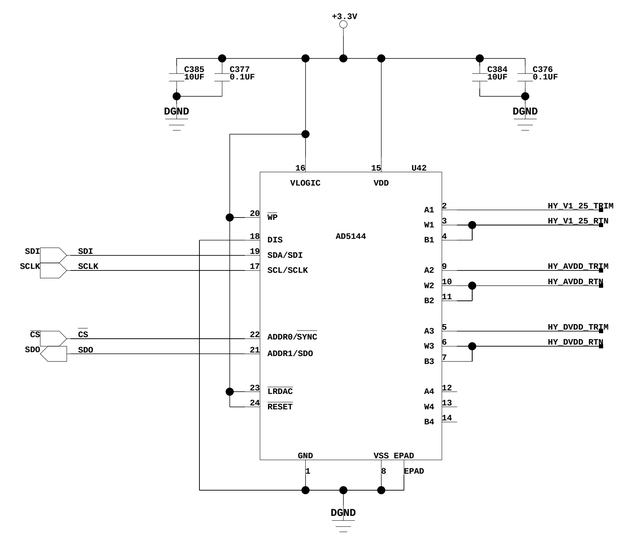

21/10/2013:16:03

SLAC NATIONAL ACCELERATOR LABORATORY
U.S. DEPARTMENT OF ENERGY
STANFORD UNIVERSITY — STANFORD, CALIFORNIA

PROPRIETARY DATA OF STANFORD UNIVERSITY AND/OR U.S. DEPARTMENT OF ENERGY. RECIPIENT SHALL NOT PUBLISH THE INFORMATION WITHIN UNLESS GRANTED SPECIFIC PERMISSION OF STANFORD UNIVERSITY.

		DATE	APPROVALS
ENGR	Benjamin Reese	2013	
DFTR			
CHKR			

HPS Front End Board
Hybrid Power Block

LOCATED AT SHEET 2

SD-249-901-07-C00 — D

REV	DESCRIPTION	DFTR	CHKR	ENGR APPV	DATE

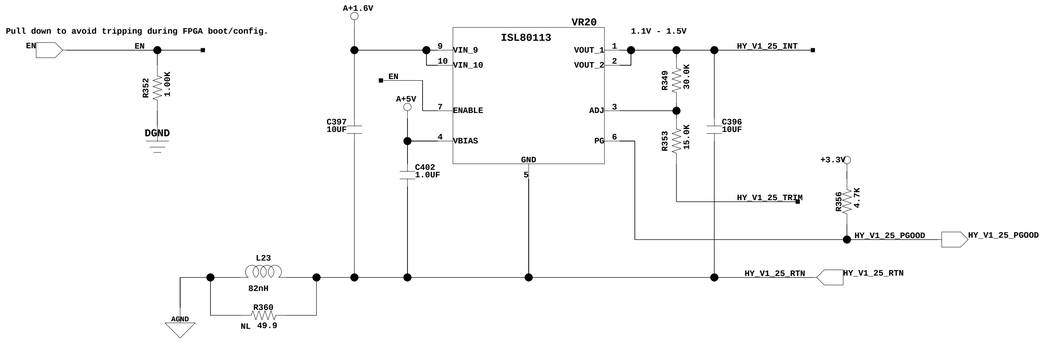

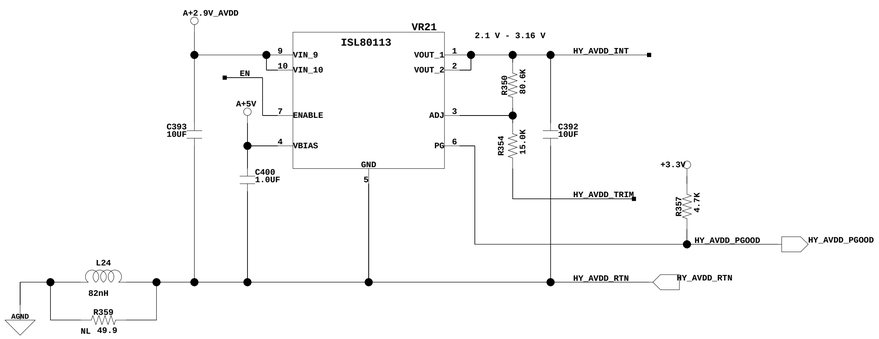

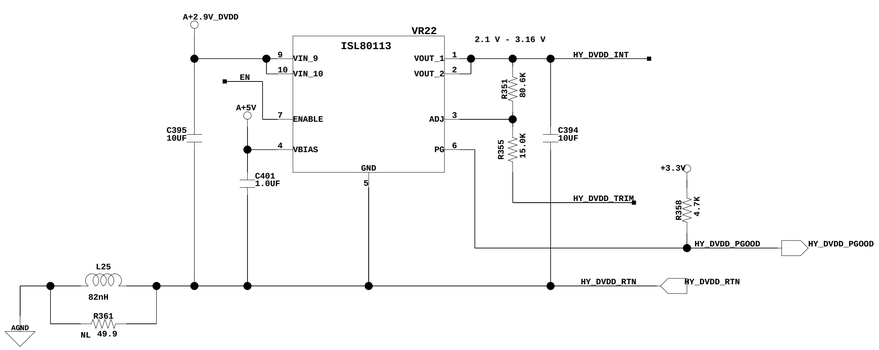

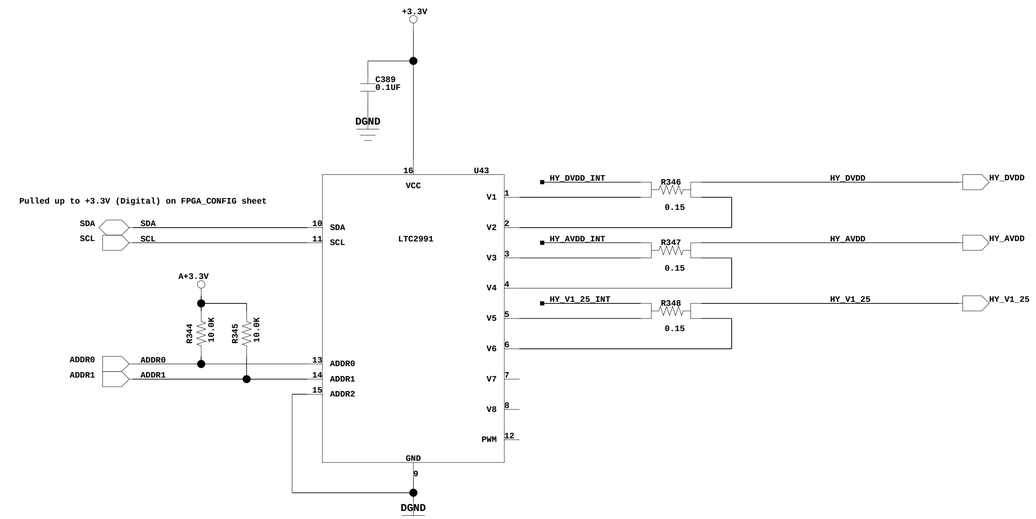

Route as thick power traces

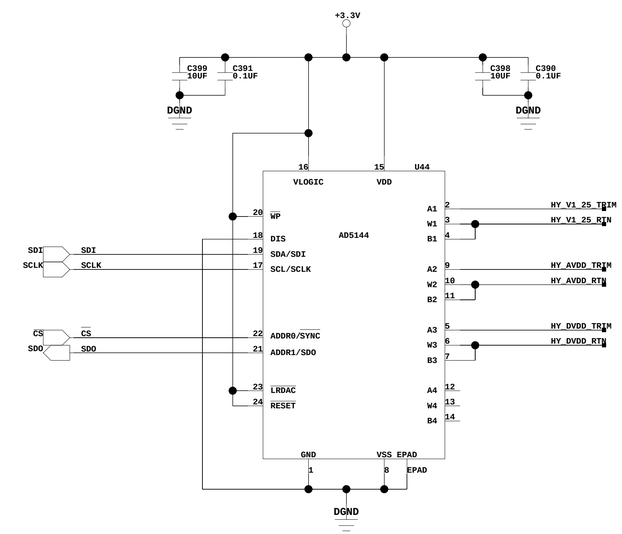

21/10/2013:16:03

SLAC NATIONAL ACCELERATOR LABORATORY
U.S. DEPARTMENT OF ENERGY
STANFORD UNIVERSITY STANFORD, CALIFORNIA

PROPRIETARY DATA OF STANFORD UNIVERSITY AND/OR U.S. DEPARTMENT OF ENERGY. RECIPIENT SHALL NOT PUBLISH THE INFORMATION WITHIN UNLESS GRANTED SPECIFIC PERMISSION OF STANFORD UNIVERSITY.

		DATE	APPROVALS
ENGR	Benjamin Reese	2013	
DFTR			
CHKR			

HPS Front End Board
Hybrid Power Block

LOCATED AT SHEET 2

SD-249-901-07-C00 D

REV	DESCRIPTION	DFTR	CHKR	ENGR APPV	DATE

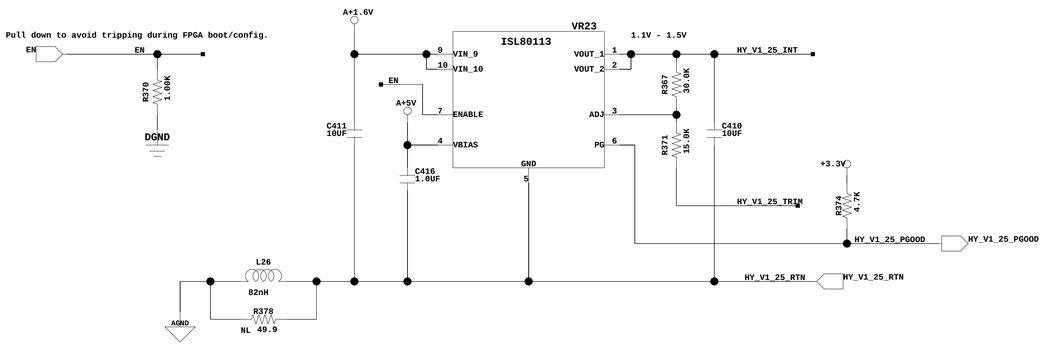

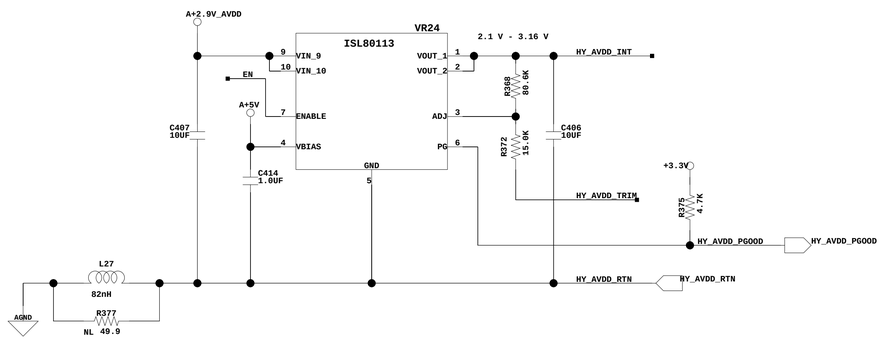

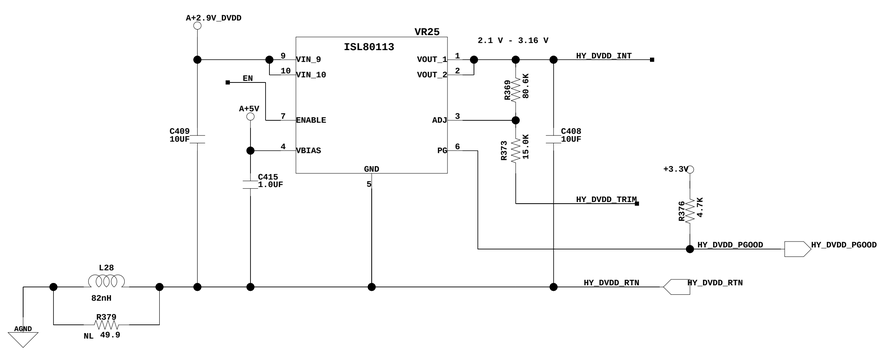

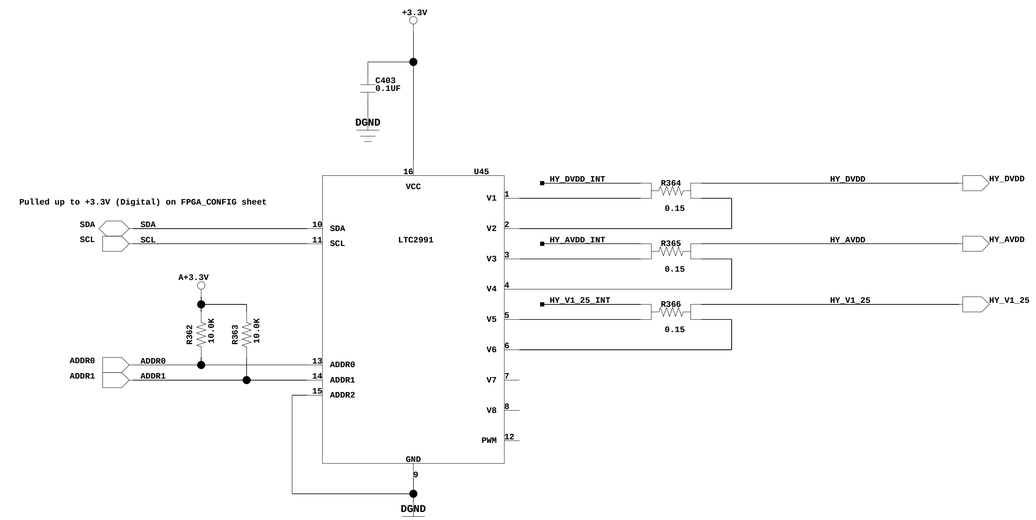

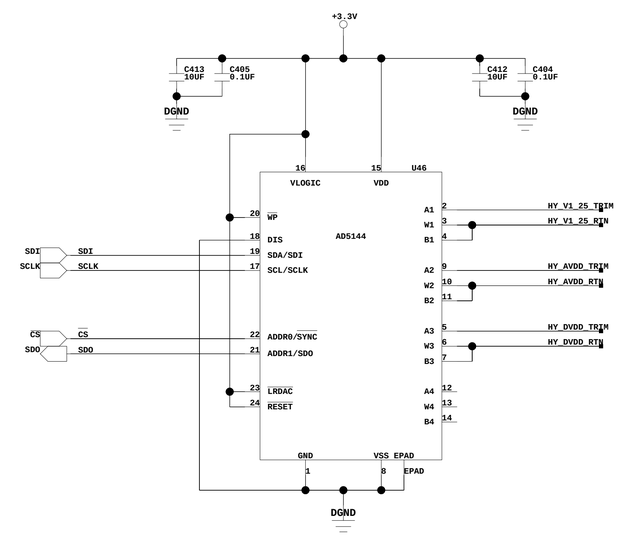

21/10/2013:16:03

SLAC NATIONAL ACCELERATOR LABORATORY
U.S. DEPARTMENT OF ENERGY
STANFORD UNIVERSITY STANFORD, CALIFORNIA

PROPRIETARY DATA OF STANFORD UNIVERSITY AND/OR U.S. DEPARTMENT OF ENERGY. RECIPIENT SHALL NOT PUBLISH THE INFORMATION WITHIN UNLESS GRANTED SPECIFIC PERMISSION OF STANFORD UNIVERSITY.

		DATE	APPROVALS
ENGR	Benjamin Reese	2013	
DFTR			
CHKR			

HPS Front End Board
Hybrid Power Block

LOCATED AT SHEET 2

SD-249-901-07-C00 D

REV	DESCRIPTION	DFTR	CHKR	ENGR APPV	DATE

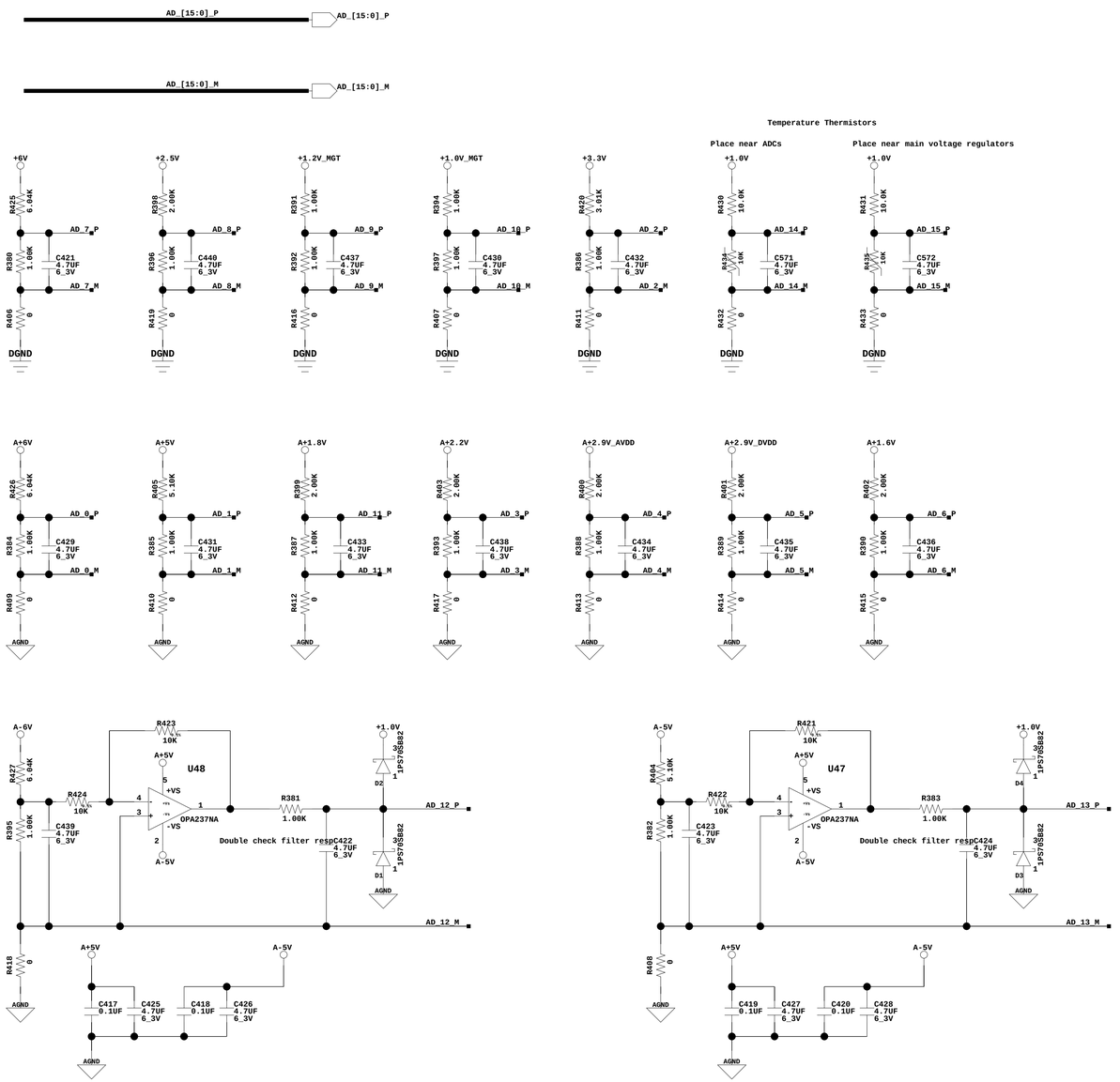

SLAC NATIONAL ACCELERATOR LABORATORY
U.S. DEPARTMENT OF ENERGY
STANFORD UNIVERSITY — STANFORD, CALIFORNIA

PROPRIETARY DATA OF STANFORD UNIVERSITY AND/OR U.S. DEPARTMENT OF ENERGY. RECIPIENT SHALL NOT PUBLISH THE INFORMATION WITHIN UNLESS GRANTED SPECIFIC PERMISSION OF STANFORD UNIVERSITY.

	DATE	APPROVALS
ENGR Benjamin Reese	2013	
DFTR		
CHKR		

HPS Front End Board

LOCATED AT SHEET 1

SD-249-901-07-C00 D

REV	DESCRIPTION	DFTR	CHKR	ENGR APPV	DATE

Total Current Draw from other sheets:
+1(+1.8V) = 180 mA
+1(+2.5V) = 180 mA
+1(MGT(+1.0V)) = 180 mA
+1(MGT(+1.2V)) = 180 mA
+1(+1.8V) = 180 mA
+1(+6V) = 180 mA
+1(+3.3V) = 180 mA
+1(+3.3V) = 180 mA

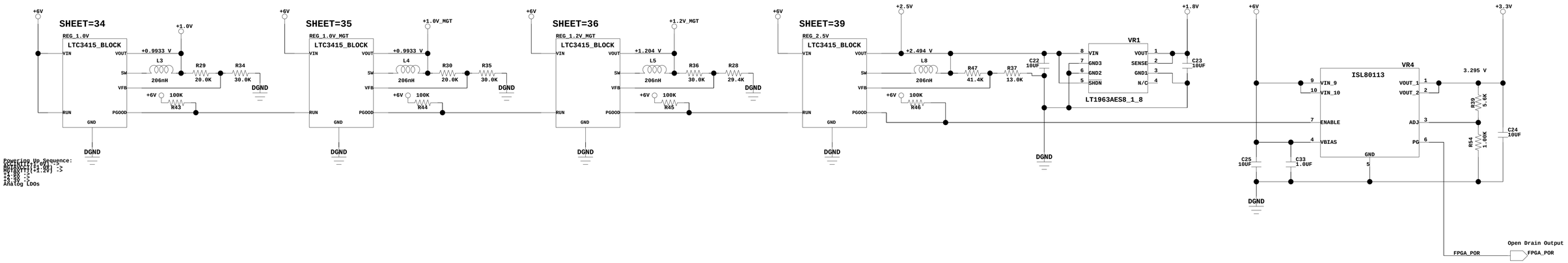

Powering Up Sequence:
Core(+1.0V) ->
MGTAVCC(+1.0V) ->
MGTAVTT(+1.2V) :S
+2.5V :S
+1.8V :S
Analog LDOs

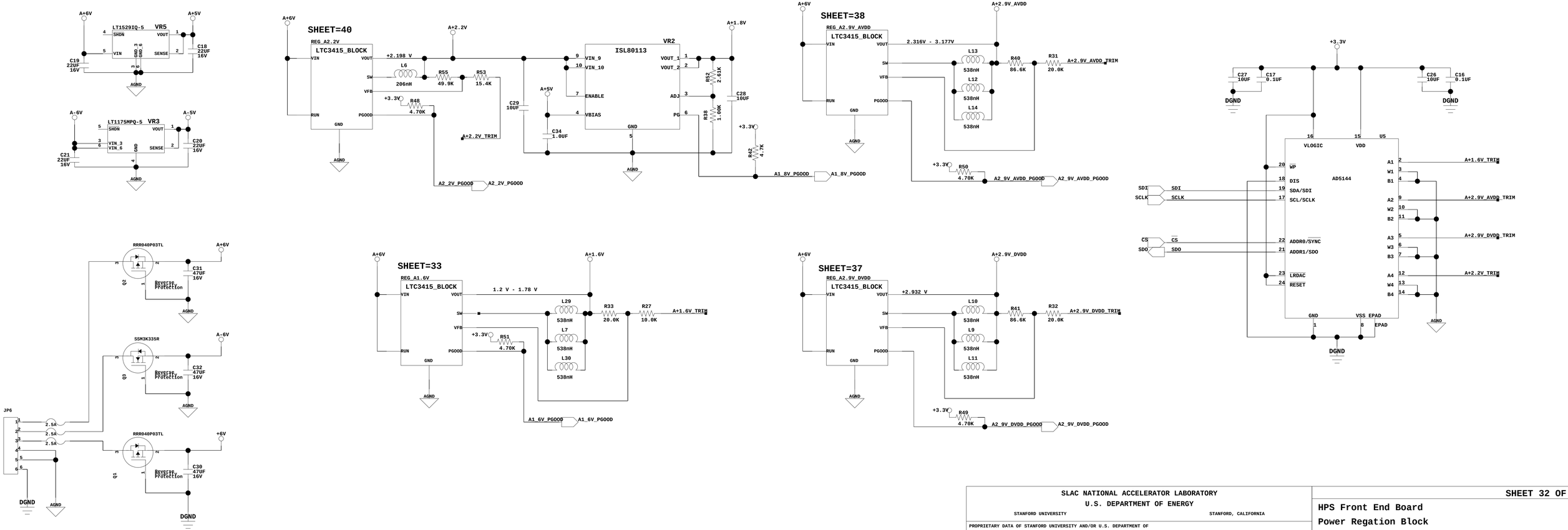

MT1 MT125 MT3 MT125 MT4 MT125 MT2 MT125

21/10/2013:09:54

SLAC NATIONAL ACCELERATOR LABORATORY
U.S. DEPARTMENT OF ENERGY
STANFORD UNIVERSITY STANFORD, CALIFORNIA

PROPRIETARY DATA OF STANFORD UNIVERSITY AND/OR U.S. DEPARTMENT OF ENERGY. RECIPIENT SHALL NOT PUBLISH THE INFORMATION WITHIN UNLESS GRANTED SPECIFIC PERMISSION OF STANFORD UNIVERSITY.

		DATE	APPROVALS
ENGR	Benjamin Reese	2013	
DFTR			
CHKR			

SHEET 32 OF 41

HPS Front End Board
Power Regation Block

LOCATED AT SHEET 1

SD-249-901-07-C00 D

REV	DESCRIPTION	DFTR	CHKR	ENGR APPV	DATE

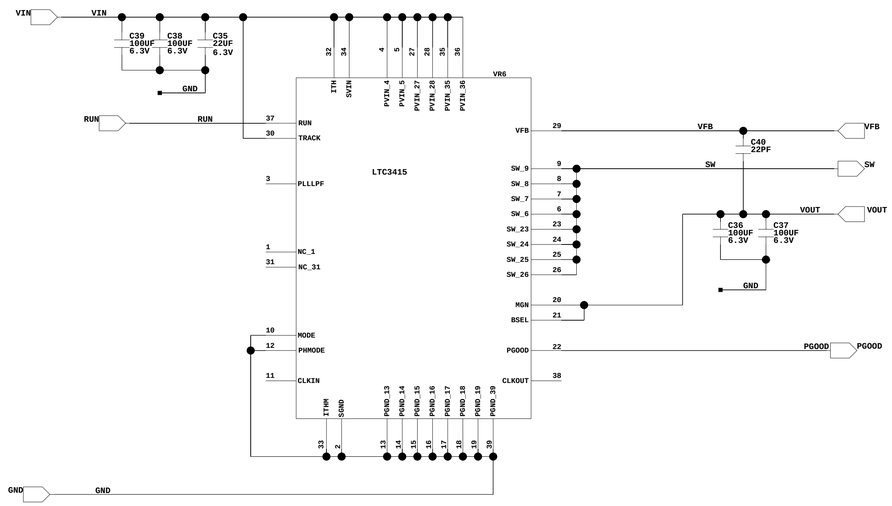

11/10/2013:09:59

SLAC NATIONAL ACCELERATOR LABORATORY
U.S. DEPARTMENT OF ENERGY
STANFORD UNIVERSITY STANFORD, CALIFORNIA

PROPRIETARY DATA OF STANFORD UNIVERSITY AND/OR U.S. DEPARTMENT OF ENERGY. RECIPIENT SHALL NOT PUBLISH THE INFORMATION WITHIN UNLESS GRANTED SPECIFIC PERMISSION OF STANFORD UNIVERSITY.

		DATE	APPROVALS
ENGR	Benjamin Reese	2013	
DFTR			
CHKR			

HPS Front End Board

LTC3415 Switching Regulator Block

LOCATED AT SHEET 32

SD-249-901-07-C00

D

REV	DESCRIPTION	DFTR	CHKR	ENGR APPV	DATE

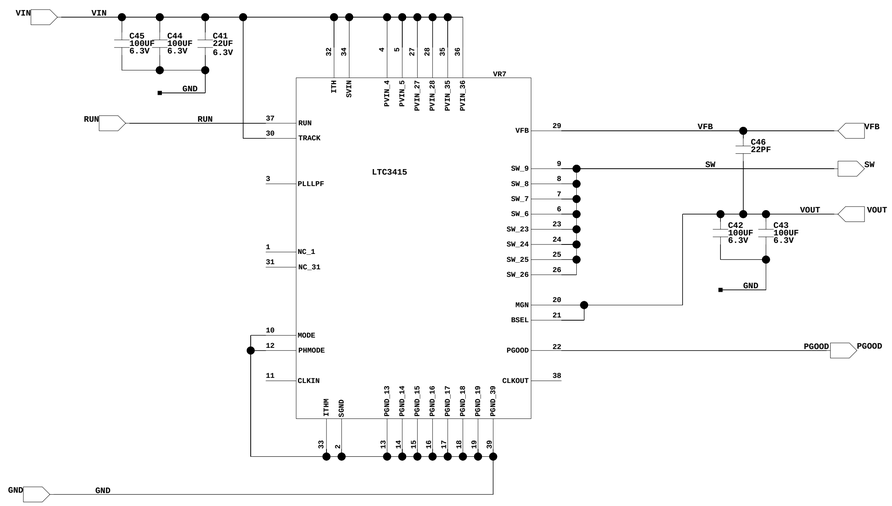

11/10/2013:09:59

SLAC NATIONAL ACCELERATOR LABORATORY
U.S. DEPARTMENT OF ENERGY
STANFORD UNIVERSITY STANFORD, CALIFORNIA

PROPRIETARY DATA OF STANFORD UNIVERSITY AND/OR U.S. DEPARTMENT OF ENERGY. RECIPIENT SHALL NOT PUBLISH THE INFORMATION WITHIN UNLESS GRANTED SPECIFIC PERMISSION OF STANFORD UNIVERSITY.

		DATE	APPROVALS
ENGR	Benjamin Reese	2013	
DFTR			
CHKR			

HPS Front End Board

LTC3415 Switching Regulator Block

LOCATED AT SHEET 32

SD-249-901-07-C00

D

REV	DESCRIPTION	DFTR	CHKR	ENGR APPV	DATE

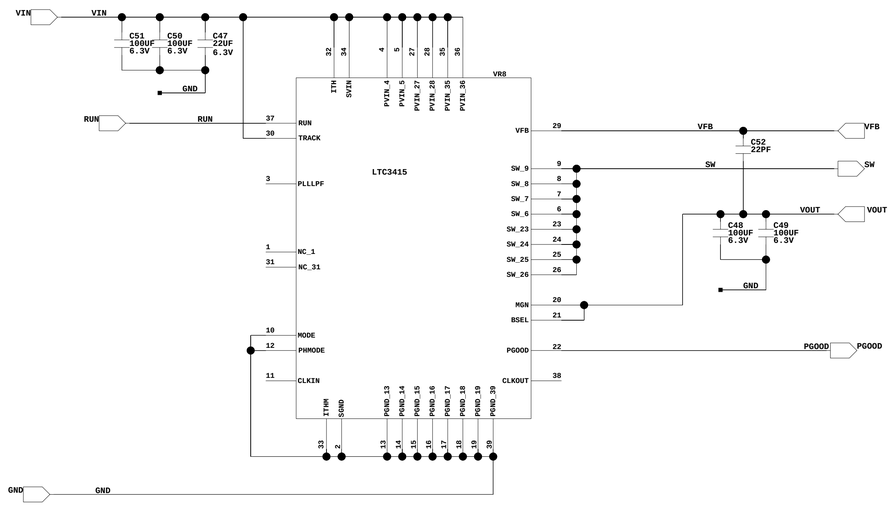

11/10/2013:09:59

SLAC NATIONAL ACCELERATOR LABORATORY
U.S. DEPARTMENT OF ENERGY
STANFORD UNIVERSITY STANFORD, CALIFORNIA

PROPRIETARY DATA OF STANFORD UNIVERSITY AND/OR U.S. DEPARTMENT OF ENERGY. RECIPIENT SHALL NOT PUBLISH THE INFORMATION WITHIN UNLESS GRANTED SPECIFIC PERMISSION OF STANFORD UNIVERSITY.

		DATE	APPROVALS
ENGR	Benjamin Reese	2013	
DFTR			
CHKR			

HPS Front End Board

LTC3415 Switching Regulator Block

LOCATED AT SHEET 32

SD-249-901-07-C00

D

REV	DESCRIPTION	DFTR	CHKR	ENGR APPV	DATE

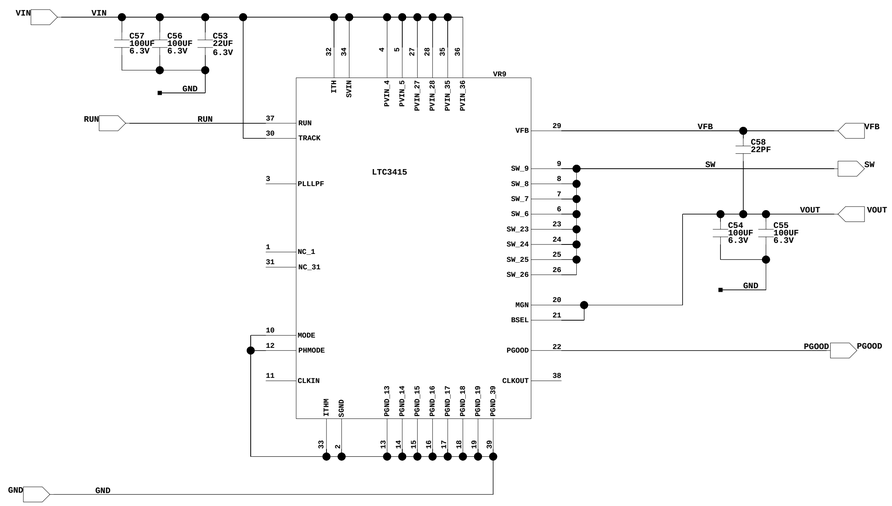

11/10/2013:09:59

SLAC NATIONAL ACCELERATOR LABORATORY
U.S. DEPARTMENT OF ENERGY
STANFORD UNIVERSITY STANFORD, CALIFORNIA

PROPRIETARY DATA OF STANFORD UNIVERSITY AND/OR U.S. DEPARTMENT OF ENERGY. RECIPIENT SHALL NOT PUBLISH THE INFORMATION WITHIN UNLESS GRANTED SPECIFIC PERMISSION OF STANFORD UNIVERSITY.

		DATE	APPROVALS
ENGR	Benjamin Reese	2013	
DFTR			
CHKR			

HPS Front End Board

LTC3415 Switching Regulator Block

LOCATED AT SHEET 32

SD-249-901-07-C00

D

REV	DESCRIPTION	DFTR	CHKR	ENGR APPV	DATE

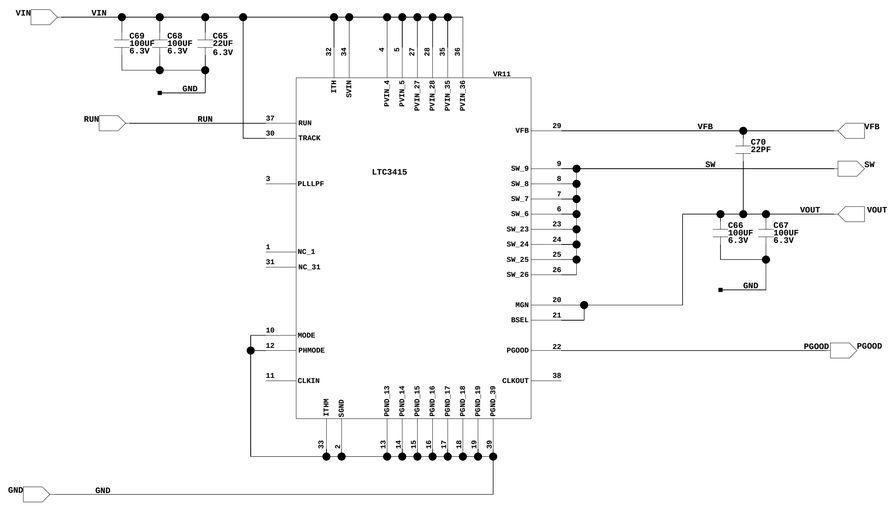

11/10/2013:09:59

SLAC NATIONAL ACCELERATOR LABORATORY
U.S. DEPARTMENT OF ENERGY
STANFORD UNIVERSITY STANFORD, CALIFORNIA

PROPRIETARY DATA OF STANFORD UNIVERSITY AND/OR U.S. DEPARTMENT OF ENERGY. RECIPIENT SHALL NOT PUBLISH THE INFORMATION WITHIN UNLESS GRANTED SPECIFIC PERMISSION OF STANFORD UNIVERSITY.

		DATE	APPROVALS
ENGR	Benjamin Reese	2013	
DFTR			
CHKR			

HPS Front End Board

LTC3415 Switching Regulator Block

LOCATED AT SHEET 32

SD-249-901-07-C00

D

REV	DESCRIPTION	DFTR	CHKR	ENGR APPV	DATE

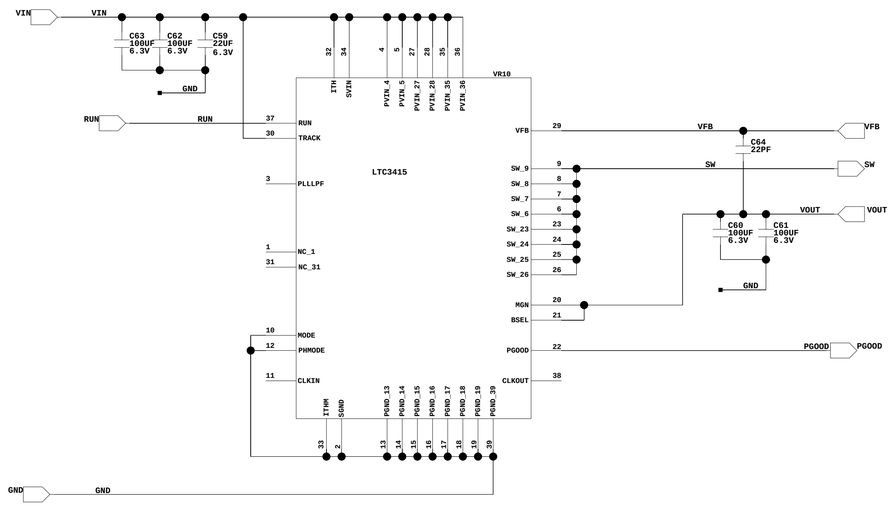

11/10/2013:09:59

SLAC NATIONAL ACCELERATOR LABORATORY
U.S. DEPARTMENT OF ENERGY
STANFORD UNIVERSITY STANFORD, CALIFORNIA

PROPRIETARY DATA OF STANFORD UNIVERSITY AND/OR U.S. DEPARTMENT OF ENERGY. RECIPIENT SHALL NOT PUBLISH THE INFORMATION WITHIN UNLESS GRANTED SPECIFIC PERMISSION OF STANFORD UNIVERSITY.

		DATE	APPROVALS
ENGR	Benjamin Reese	2013	
DFTR			
CHKR			

HPS Front End Board

LTC3415 Switching Regulator Block

LOCATED AT SHEET 32

SD-249-901-07-C00

D

REV	DESCRIPTION	DFTR	CHKR	ENGR APPV	DATE

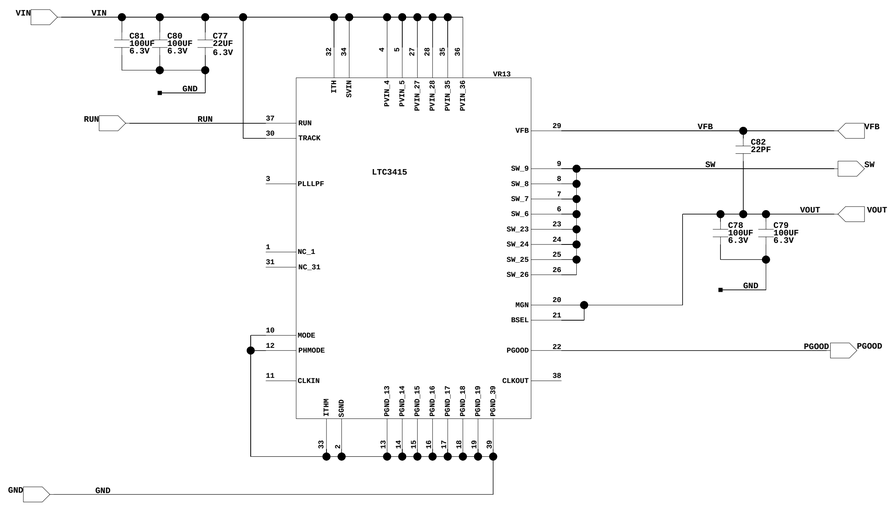

11/10/2013:09:59

SLAC NATIONAL ACCELERATOR LABORATORY
U.S. DEPARTMENT OF ENERGY
STANFORD UNIVERSITY STANFORD, CALIFORNIA

PROPRIETARY DATA OF STANFORD UNIVERSITY AND/OR U.S. DEPARTMENT OF ENERGY. RECIPIENT SHALL NOT PUBLISH THE INFORMATION WITHIN UNLESS GRANTED SPECIFIC PERMISSION OF STANFORD UNIVERSITY.

		DATE	APPROVALS
ENGR	Benjamin Reese	2013	
DFTR			
CHKR			

HPS Front End Board

LTC3415 Switching Regulator Block

LOCATED AT SHEET 32

SD-249-901-07-C00

D

REV	DESCRIPTION	DFTR	CHKR	ENGR APPV	DATE

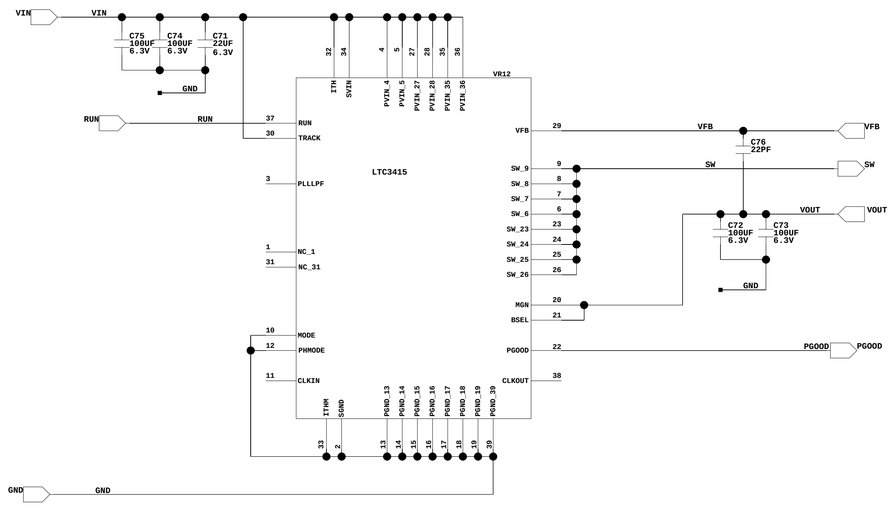

11/10/2013:09:59

SLAC NATIONAL ACCELERATOR LABORATORY
U.S. DEPARTMENT OF ENERGY
STANFORD UNIVERSITY STANFORD, CALIFORNIA

PROPRIETARY DATA OF STANFORD UNIVERSITY AND/OR U.S. DEPARTMENT OF ENERGY. RECIPIENT SHALL NOT PUBLISH THE INFORMATION WITHIN UNLESS GRANTED SPECIFIC PERMISSION OF STANFORD UNIVERSITY.

		DATE	APPROVALS
ENGR	Benjamin Reese	2013	
DFTR			
CHKR			

HPS Front End Board

LTC3415 Switching Regulator Block

LOCATED AT SHEET 32

SD-249-901-07-C00

D