Fig 4.1-1 GLAST ACD Electronic Functional Block Diagram Level 2, Tiles

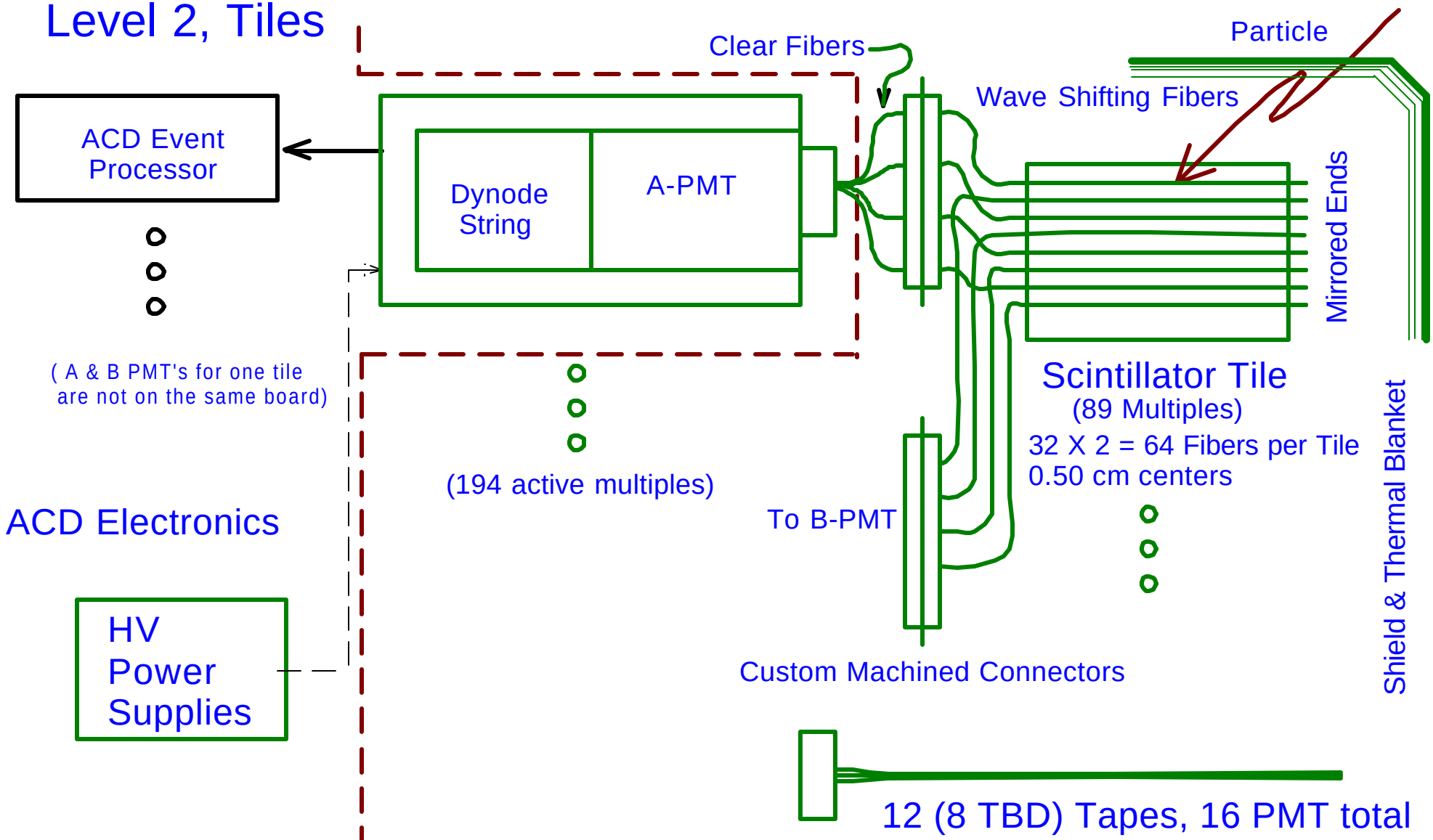

Tom Riley
6/20/01
bldia2T.skf