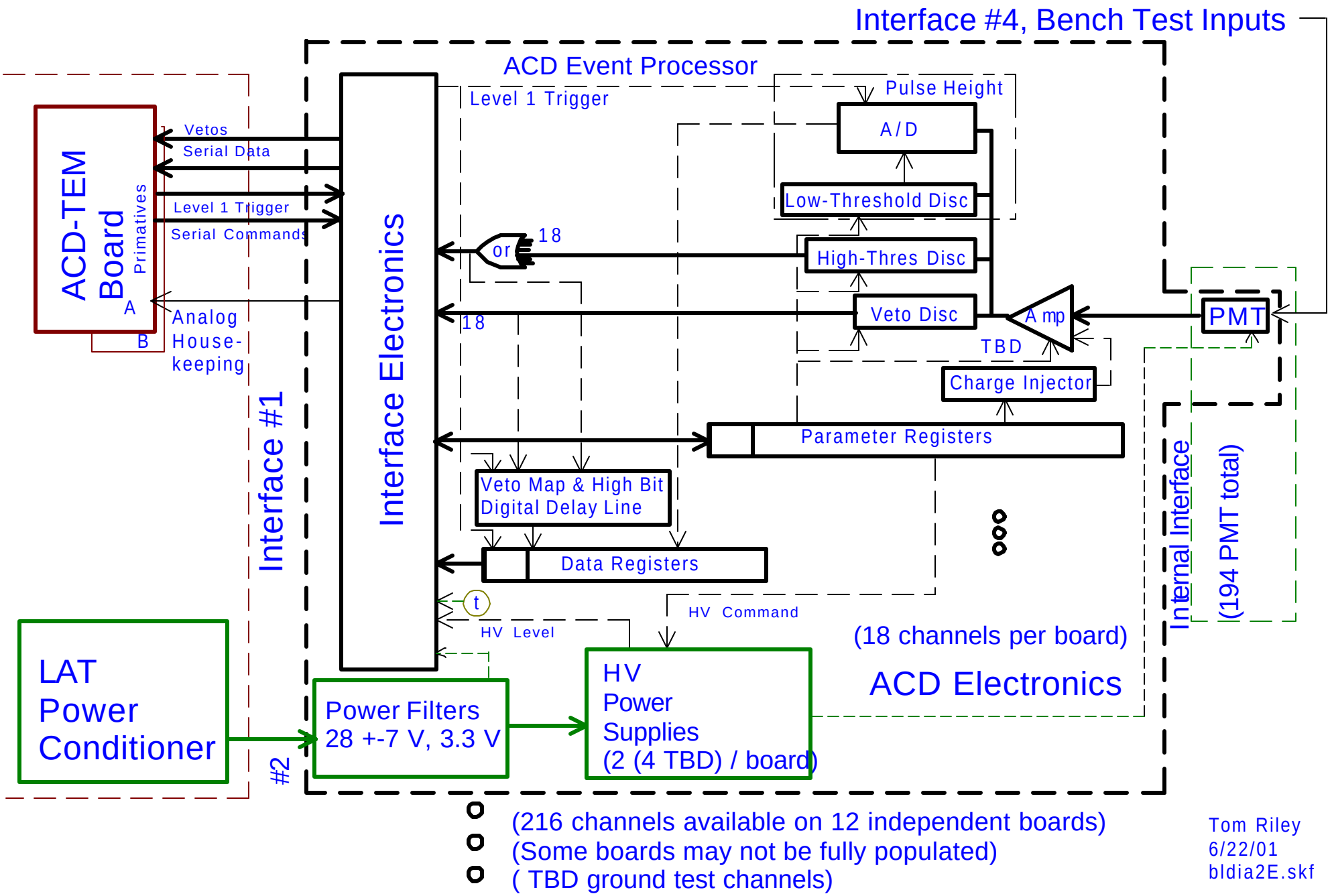Fig 4.2-1 GLAST ACD Electronic Functional Block Diagram
Level 2, ACD Electronics