Fig 4. -1 GLAST ACD Electronic Functional Block Diagram Top Level

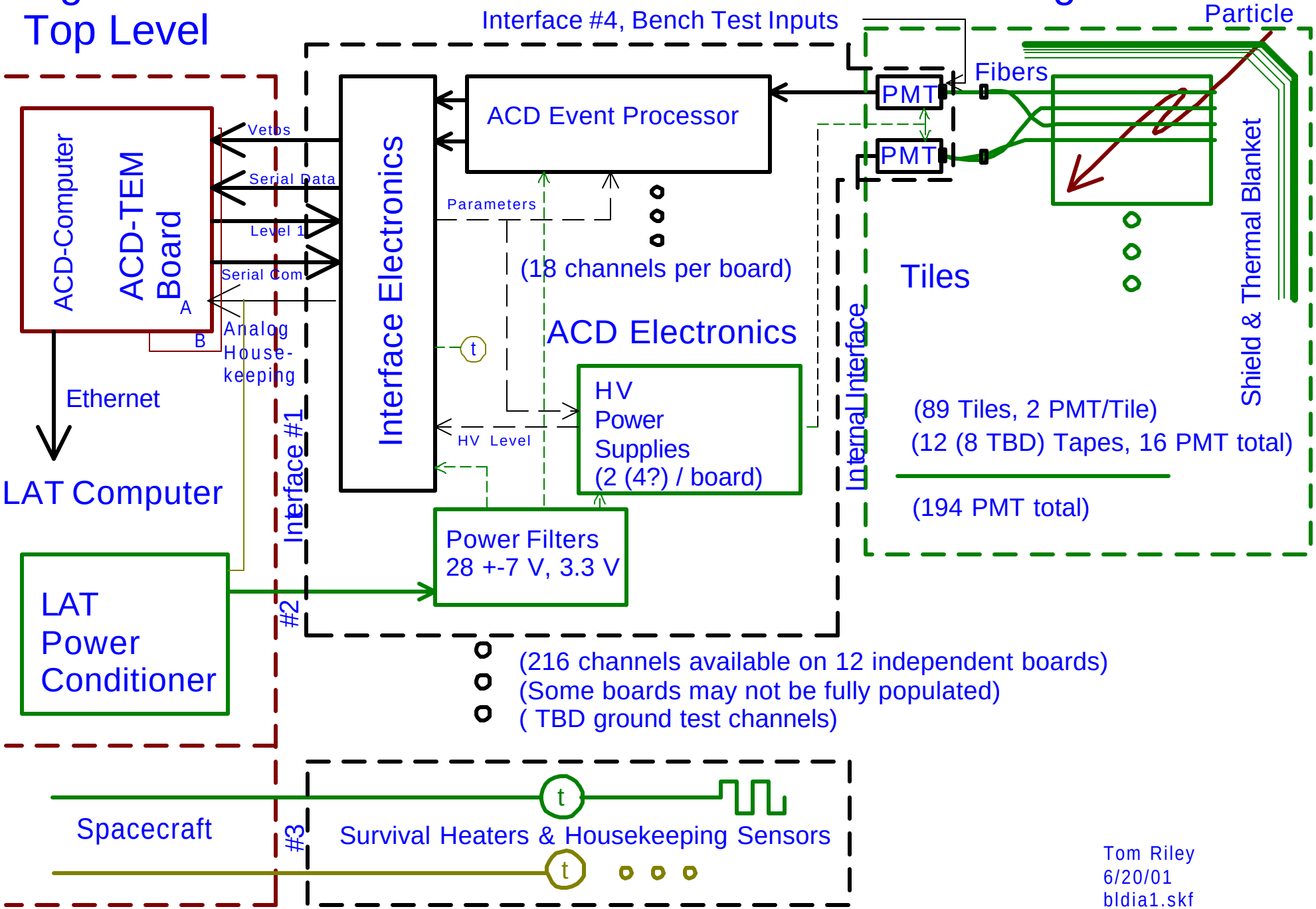

Tom Riley
6/20/01
bldia1.skf